# Katalog náhradních dílů

# ACE OF SPADES 125 / R
# OUTLAW 125

OUTLAW 125

ACE OF SPADES 125

ACE OF SPADES 125R

ITALY - 1971

# ACE OF SPADES 125 ACE OF SPADES 125R OUTLAW 125

MANUALS AND EQUIPMENT

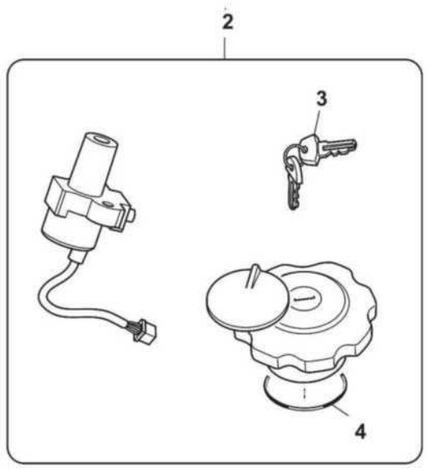

MANUALS AND EQUIPMENT

| Notes | No | Code No | NAME | Q.ty | |
|---|---|---|---|---|---|
| | 1 | 10000140 | QUICK MANUAL | 1 | |
| | 2 | F000A01493 | LOCK KIT | 1 | |
| | 3 | F000P01565 | KEY BLANK | 1 | |
| | 4 | F000P01566 | GASKET CAP | 1 | |
| | | | | | |
| | | | | | |
| | | | | | |
| | | | | | |
| | | | | | |
| | | | | | |
| | | | | | |
| | | | | | |
| | | | | | |
| | | | | | |
| | | | | | |
| | | | | | |
| | | | | | |
| | | | | | |
| | | | | | |
| | | | | | |
| | | | | | |
| | | | | | |
| | | | | | |
| | | | | | |
| | | | | | |
| | | | | | |
| | | | | | |
| | | | | | |

CYLINDER, PISTON

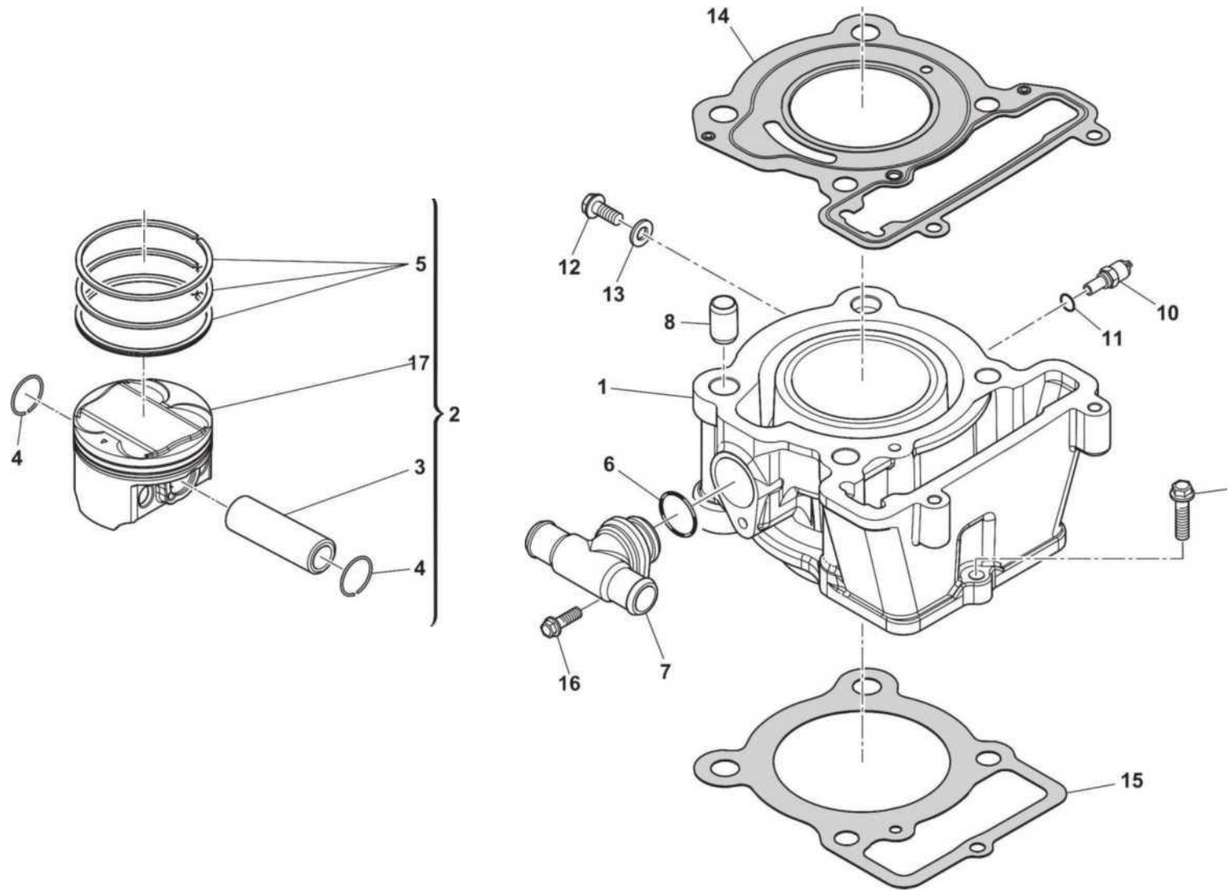

CYLINDER, PISTON

| Notes | No | Code No | NAME | Q.ty | |
|---|---|---|---|---|---|
| | 1 | 27010930 | CYLINDER | 1 | |
| | 2 | 76220001 | Piston assembly | 1 | |
| | 3 | 21040047 | PISTON PIN15mm-L=41mm | 1 | |
| | 4 | 72080133 | PISTON PIN RETAINING RING | 2 | |
| | 5 | 21030599 | PISTON RING KIT | 2 | |
| | 6 | 72150236 | O-RING-9.2x1.8 | 1 | |
| | 7 | 17050010 | UNION | 1 | |
| | 8 | 72060169 | DOWEL PIN -012x10 | 1 | |
| | 9 | 72012194 | SCREW TCEI M6x23 | 4 | |
| | 10 | 20070005 | WATER TEMPERATURE SENSOR | 1 | |
| | 11 | 72150213 | O-RING- 10x1.9 | 1 | |
| | 12 | 72010155 | FLANGED EXAGON HEAD SCREW M6x12 | 1 | |
| | 13 | 72040157 | COPPER WASHER6.5x13x2 | 1 | |
| | 14 | 72130612 | HEAD GASKET | 1 | |
| | 15 | 72130636 | CYLINDER GASKET | 1 | |
| | 16 | 72010157 | FLANGED EXAGON HEAD SCREW M6x16 | 1 | |
| | 17 | 21020156 | COMPLETE PISTON ASSY | 1 | |
| | | | | | |
| | | | | | |
| | | | | | |
| | | | | | |
| | | | | | |
| | | | | | |
| | | | | | |
| | | | | | |
| | | | | | |

CYLINDER HEAD

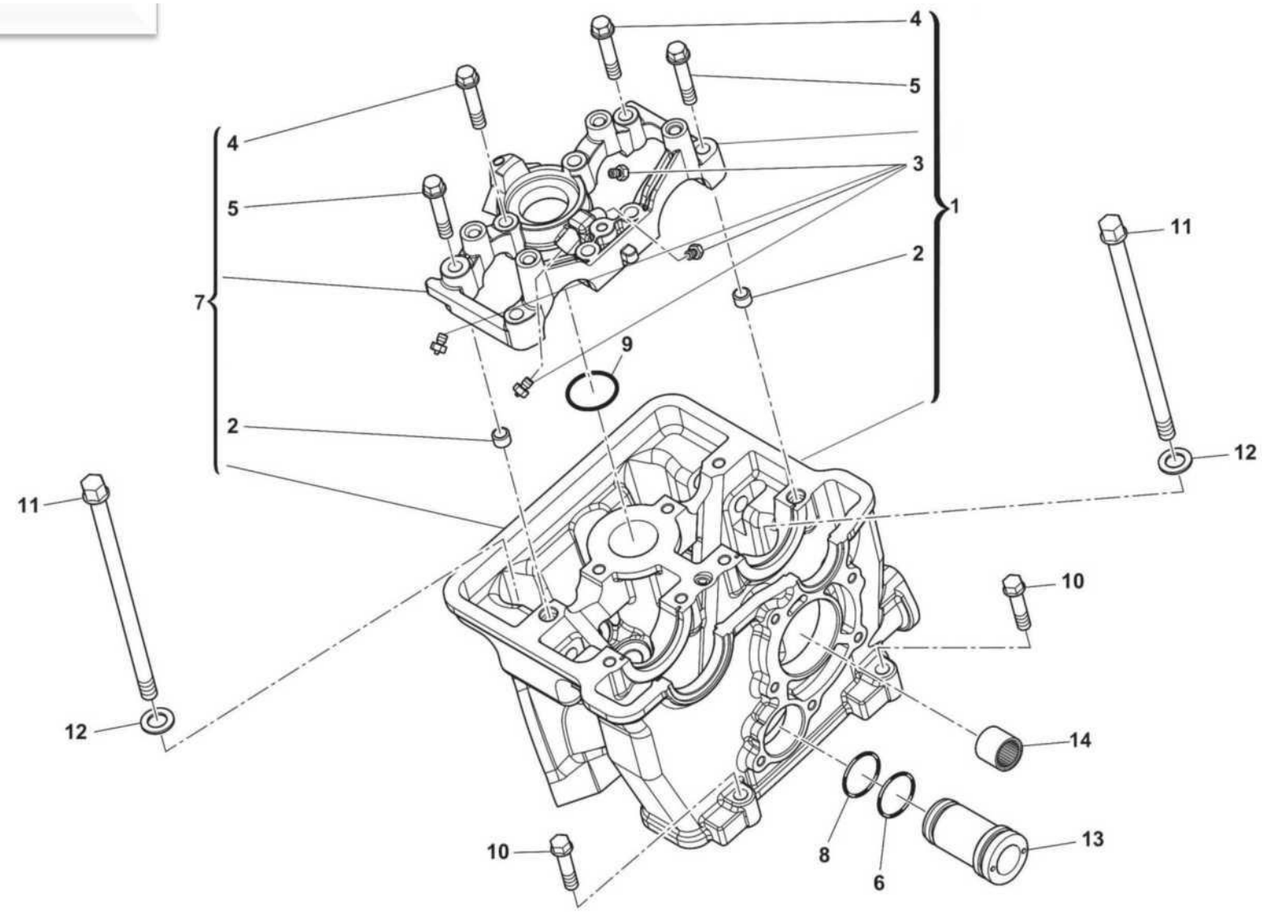

CYLINDER HEAD

| Notes | No | Code No | NAME | Q.ty | |
|---|---|---|---|---|---|
| | 1 | 76220002 | CYLINDER HEAD ASSEMBLY | 1 | |
| | 2 | 161795502 | DOWEL PIN-8x10 | 2 | |
| | 3 | 73131643 | OIL JET | 4 | |
| | 4 | 72010168 | BOLT-M6x30 | 6 | |
| | 5 | 72010388 | BOLT-M6x32 | 2 | |
| | 6 | 72150236 | O-SHAPE WASHER | 1 | |
| | 7 | 22011314 | CYLINDER HEAD | 1 | |
| | 8 | 72150235 | O-SHAPE WASHER | 1 | |
| | 9 | 72150234 | O-SHAPE WASHER | 1 | |
| | 10 | 72012193 | BOLT- M6x30 | 2 | |
| | 11 | 72012142 | CYLINDER BOLT-M10x145 | 4 | |
| | 12 | 72040378 | IRON WASHER | 4 | |
| | 13 | 17060162 | OUTPUT WATER PIPE, CYLINDER HEAD | 1 | |
| | 14 | 70090234 | NEEDLE BEARING | 1 | |

VALVE COVER

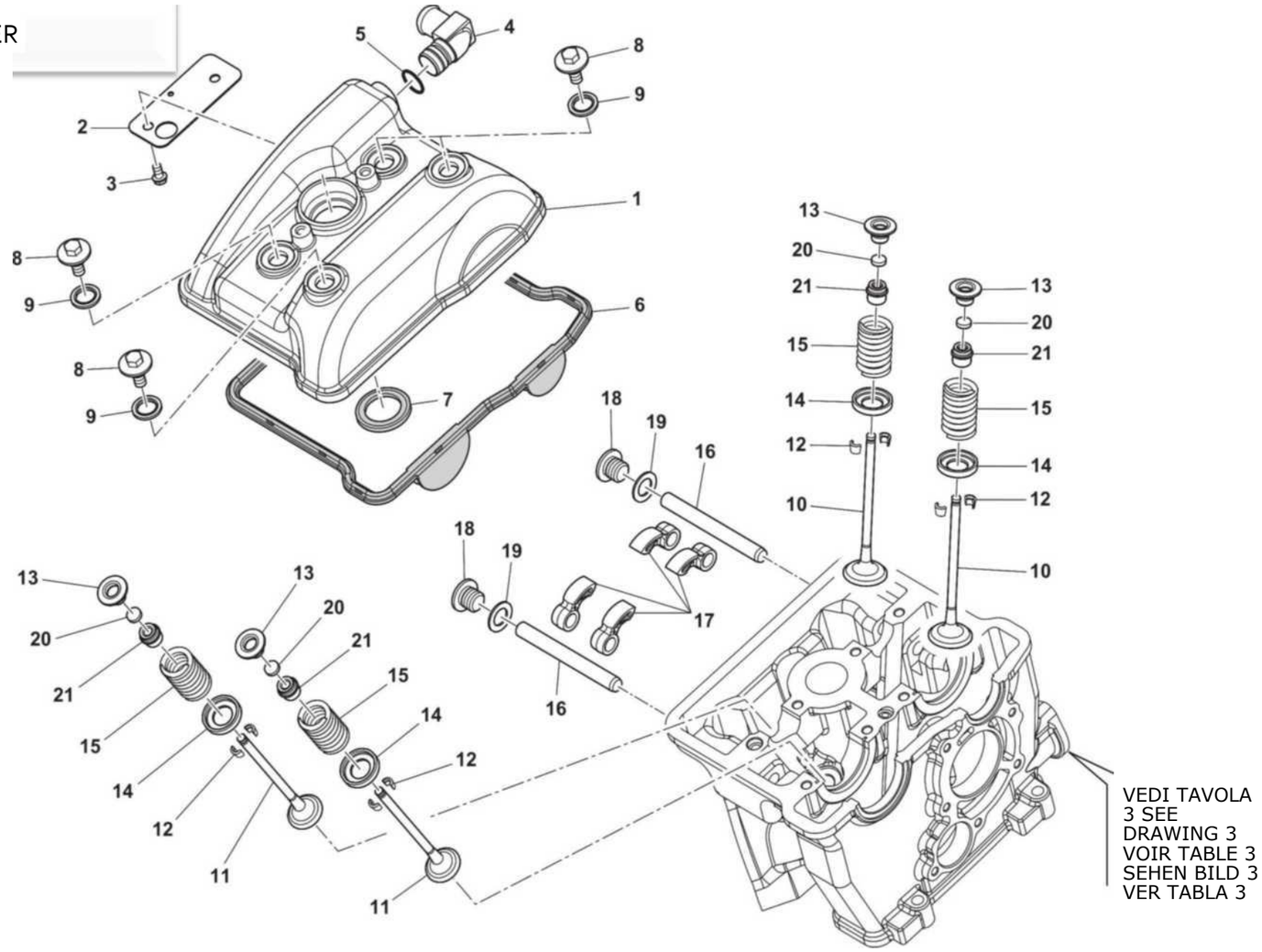
1
2
3
4
5
6
7
8
9
10
11
12
13
14
15
16
17
18
19
20
21
VEDI TAVOLA
3 SEE
DRAWING 3
VOIR TABLE 3
SEHEN BILD 3
VER TABLA 3

VALVE COVER

| Notes | No | Code No | NAME | Q.ty | |
|---|---|---|---|---|---|
| | 1 | 22150325 | HEAD COVER | 1 | |
| | 2 | 73131648 | BLOW-BY PLATE | 1 | |
| | 3 | 72012186 | SCREW TE M5x10 | 2 | |
| | 4 | 11050035 | BREATHER PIPE FITTING | 1 | |
| | 5 | 72150213 | O-RING-10 x 1.9 | 1 | |
| | 6 | 72150230 | HEAD COVER GASKET | 1 | |
| | 7 | 72150233 | RUBBER RING | 1 | |
| | 8 | 72012182 | BOLT | 4 | |
| | 9 | 73012547 | GM2000 WASHER | 4 | |
| | 10 | 22020098 | INTAKE VALVE | 2 | |
| | 11 | 22020099 | EXHAUST VALVE | 2 | |
| | 12 | 22040010 | COLLET | 8 | |
| | 13 | 22030022 | RETAINER | 4 | |
| | 14 | 22030023 | PLATE | 4 | |
| | 15 | 72120165 | VALVE SPRING | 4 | |
| | 16 | 22070033 | PIN-8x74 | 2 | |
| | 17 | 22050045 | ROCKER ARM | 4 | |
| | 18 | 72012177 | PLUG | 2 | |
| | 19 | 72040667 | WASHER-0 10 x 0 16 x 1.5 | 2 | |
| | 20 | 22020047 | PAD, VALVE ADJUSTING | 4 | |
| | 21 | 72110237 | VALVE SEALING | 4 | |
| | | | | | |
| | | | | | |
| | | | | | |
| | | | | | |
| | | | | | |

CRANKSHAFT

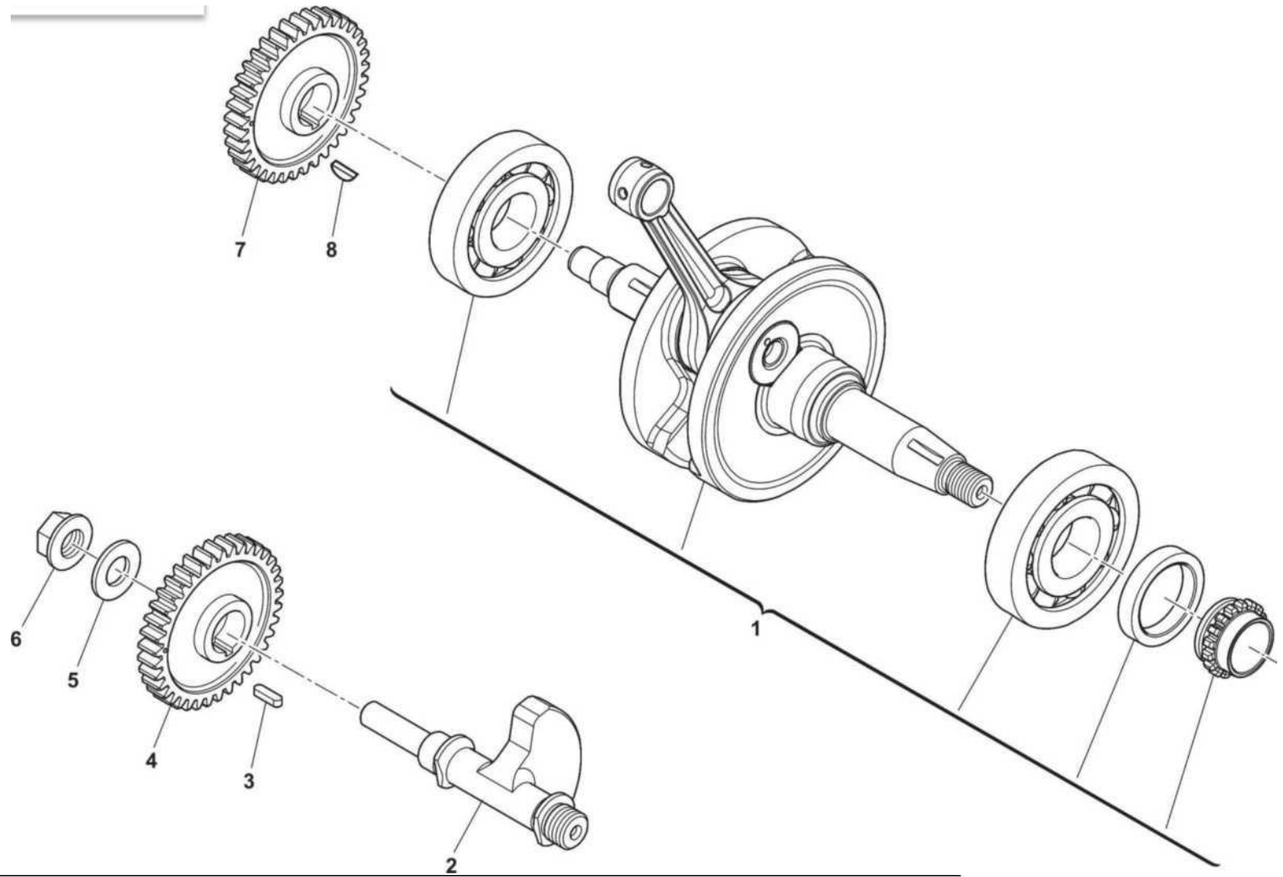

CRANKSHAFT

| Notes | No | Code No | NAME | Q.ty | |
|---|---|---|---|---|---|
| | 1 | 21010216 | COMPLETE CRANKSHAFT | 1 | |
| | 2 | 21090022 | COUNTERSHAFT | 1 | |
| | 3 | 21210011 | 5x5x13 TAB | 1 | |
| | 4 | 24020094 | GEAR | 1 | |
| | 5 | 72040670 | WASHER- 010.5x 0 24x3 | 1 | |
| | 6 | 72020545 | M10x1 NUT | 1 | |
| | 7 | 24020093 | GEAR | 1 | |
| | 8 | 21210013 | TAB4 x 4 x 10 | 1 | |
| | | | | | |
| | | | | | |
| | | | | | |
| | | | | | |
| | | | | | |
| | | | | | |
| | | | | | |
| | | | | | |
| | | | | | |
| | | | | | |
| | | | | | |
| | | | | | |
| | | | | | |
| | | | | | |
| | | | | | |
| | | | | | |
| | | | | | |

MOTORCYCLE PARTS LIST

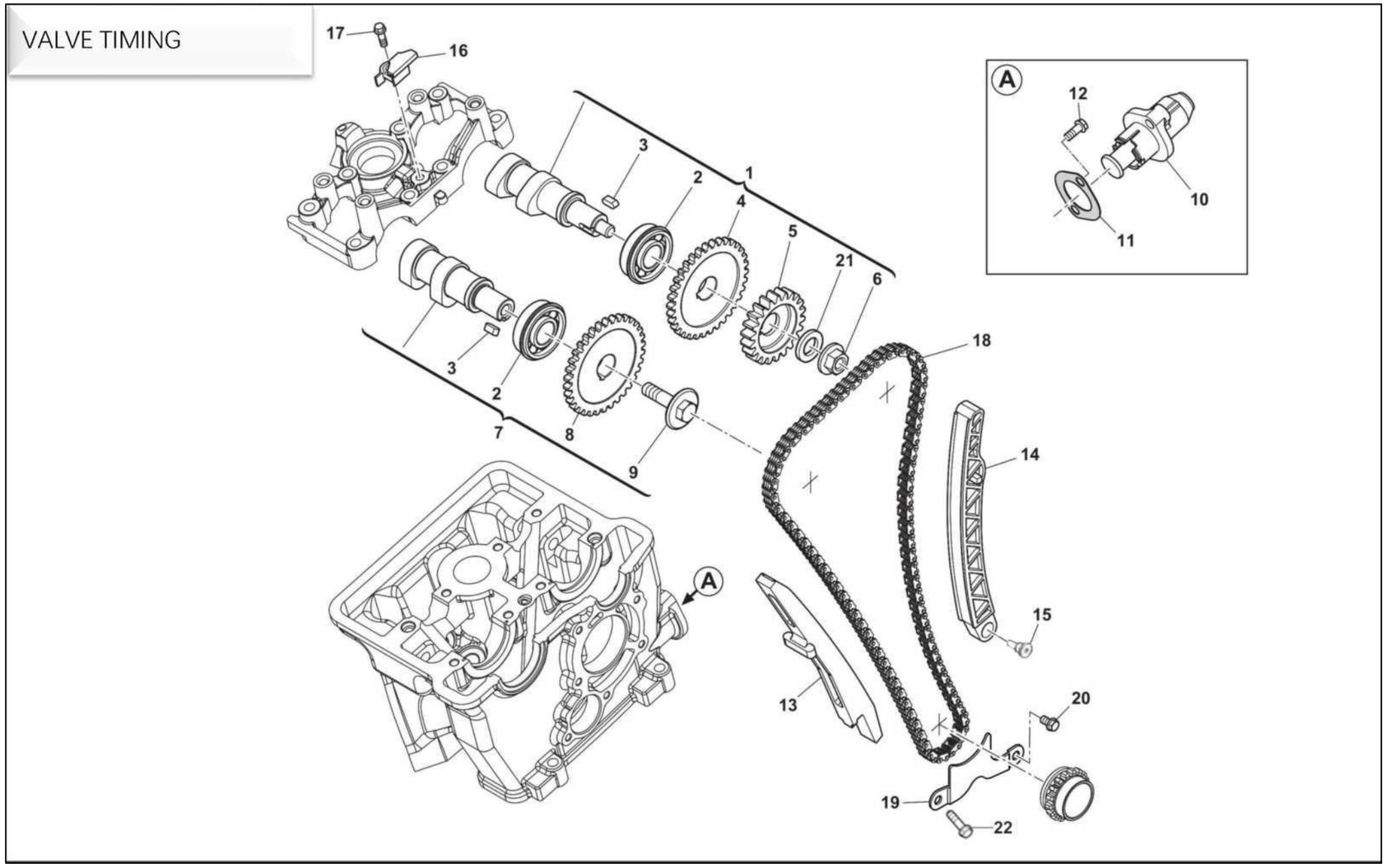

VALVE TIMING

| Notes | No | Code No | NAME | Q.ty | |
|---|---|---|---|---|---|
| | 1 | 22000062 | INTAKE CAMSHAFT | 1 | |
| | 2 | 22190019 | CAMSHAFT BEARING 6202NR | 2 | |
| | 3 | 21210012 | TAB-4 x 4 x 10 | 2 | |
| | 4 | 15170125 | DRIVEN GEAR | 1 | |
| | 5 | 17010012 | PUMP GEAR | 1 | |
| | 6 | 72020552 | FLANGED NUT M0 | 1 | |
| | 7 | 22000063 | EXHAUST CAMSHAFT | 1 | |
| | 0 | 15170126 | DRIVEN GEAR | 1 | |
| | 9 | 72012176 | M8x30 SPECIAL BOLT | 1 | |
| | 10 | 15150023 | COMPLETE CHAIN TENSIONER | 1 | |
| | 11 | 72130620 | GASKET | 1 | |
| | 12 | 72010163 | FLANGED EXAGON HEAD SCREW M6x25 | 2 | |
| | 13 | 73012510 | FIXED SLIDER | 1 | |
| | 14 | 73012517 | MOVING SLIDER | 1 | |
| | 15 | 72012103 | BOLT-M6 x 14 | 1 | |
| | 16 | 73012519 | SLIDER | 1 | |
| | 17 | 72010157 | FLANGED EXAGON HEAD SCREW M6x16 | 1 | |
| | 10 | 15160047 | TIMING CHAIN (122 LINKS) | 1 | |
| | 19 | 73131547 | TIMING CHAIN GUIDE PLATE | 1 | |
| | 20 | 72010157 | FLANGED EXAGON HEAD SCREW M6x16 | 1 | |
| | 21 | 72040431 | WASHER- 0 0 x 0 20 x 2 | 1 | |
| | 22 | 72010599 | FLANGED EXAGON HEAD SCREW M6x75 | 1 | |
| | | | | | |
| | | | | | |
| | | | | | |
| | | | | | |

OIL PUMP

13

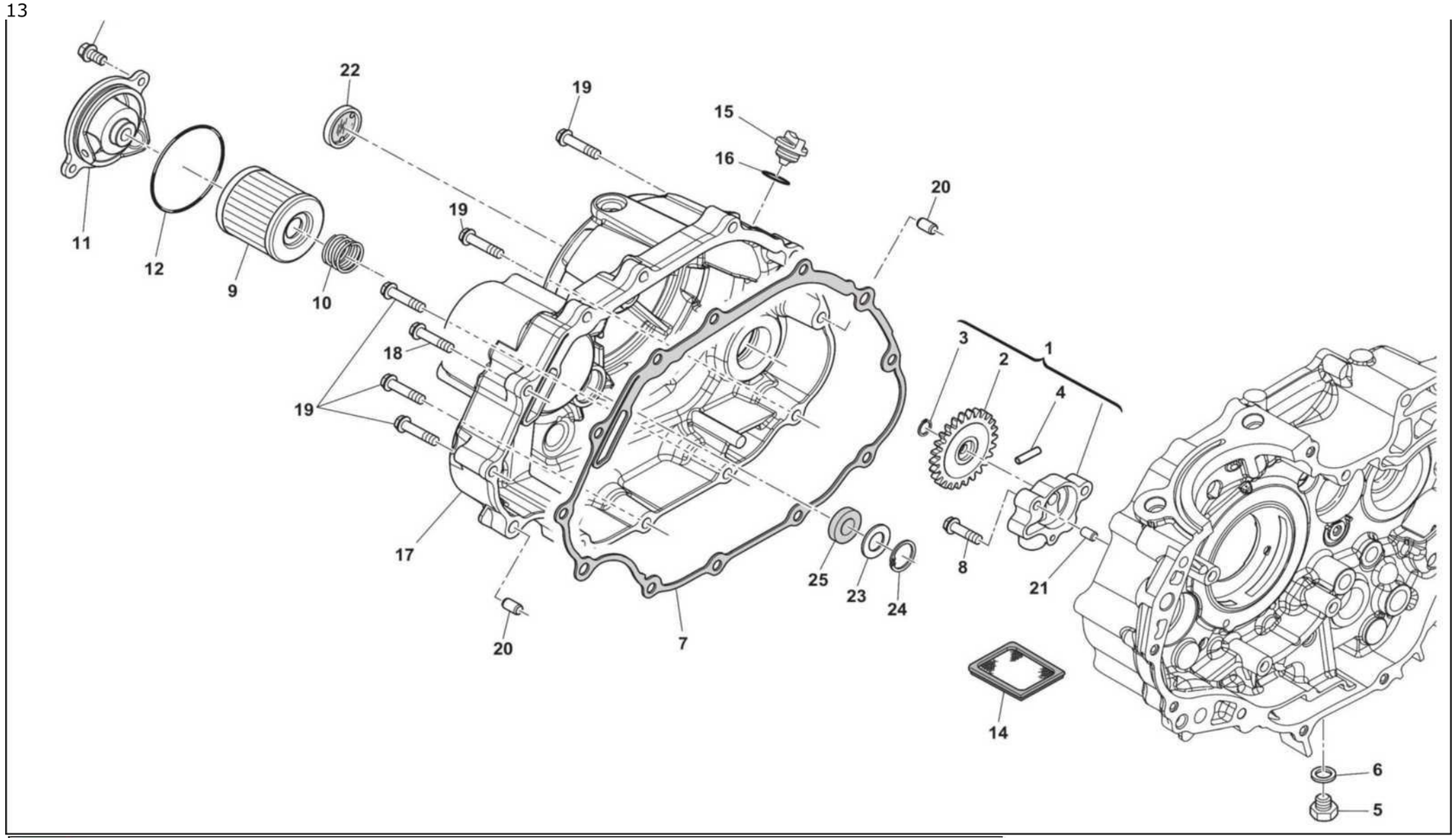

OIL PUMP

| Notes | No | Code No | NAME | Qty | |
|---|---|---|---|---|---|
| | 1 | 20010078 | COMPLETE OIL PUMP | 1 | |
| | 2 | 20080022 | OIL PUMP GEAR09 | 1 | |
| | 3 | 20080024 | RETAINING RING | 1 | |
| | 4 | 20080023 | R03x16 OLLER | 1 | |
| | 5 | 72011021 | OIL DRAIN PLUG M12 x 1.5 x 15 | 1 | |
| | 6 | 72040159 | WASHER12.5 x 20 x 1.5 | 1 | |
| | 7 | 72130623 | GASKET | 1 | |
| | 8 | 72010388 | BOLT M6X32 | 2 | |
| | 9 | 20030030 | OIL CARTRIDGE FILTER | 1 | |
| | 10 | 72120166 | FILTER/CARTRIDGE PRESSING SPRING | 1 | |
| | 11 | 14090088 | OIL FILTER COVER | 1 | |
| | 12 | 72150237 | O-RING-48.1 x 1.8 | 1 | |
| | 13 | 72010157 | SCREW M6x16 | 2 | |
| | 14 | 11060002 | MESH FILTER | 1 | |
| | 15 | 73012556 | OIL FILLER PLUG | 1 | |
| | 16 | 72150018 | O-RING-18 x 3.5- | 1 | |
| | 17 | 13012114 | CLUTCH COVER | 1 | |
| | 18 | 72010387 | FLANGED EXAGON HEAD SCREW M6x28 | 1 | |
| | 19 | 72010389 | FLANGED EXAGON HEAD SCREW M6x40 | 9 | |
| | 20 | 72060012 | DOWEL PIN 08x14 | 2 | |
| | 21 | 72060013 | BUSHING | 2 | |
| | 22 | 73012527 | OIL LEVEL INSPECTION SIGHT GLASS | 1 | |
| | 23 | 72040677 | WASHER-14 x 22 x 1 | 1 | |
| | 24 | 72080073 | CIRCLIP | 1 | |
| | 25 | 72110169 | 012x022x5 SEALING RING | 1 | |
| | | | | | |

## LEFT CRANKCASE COVER

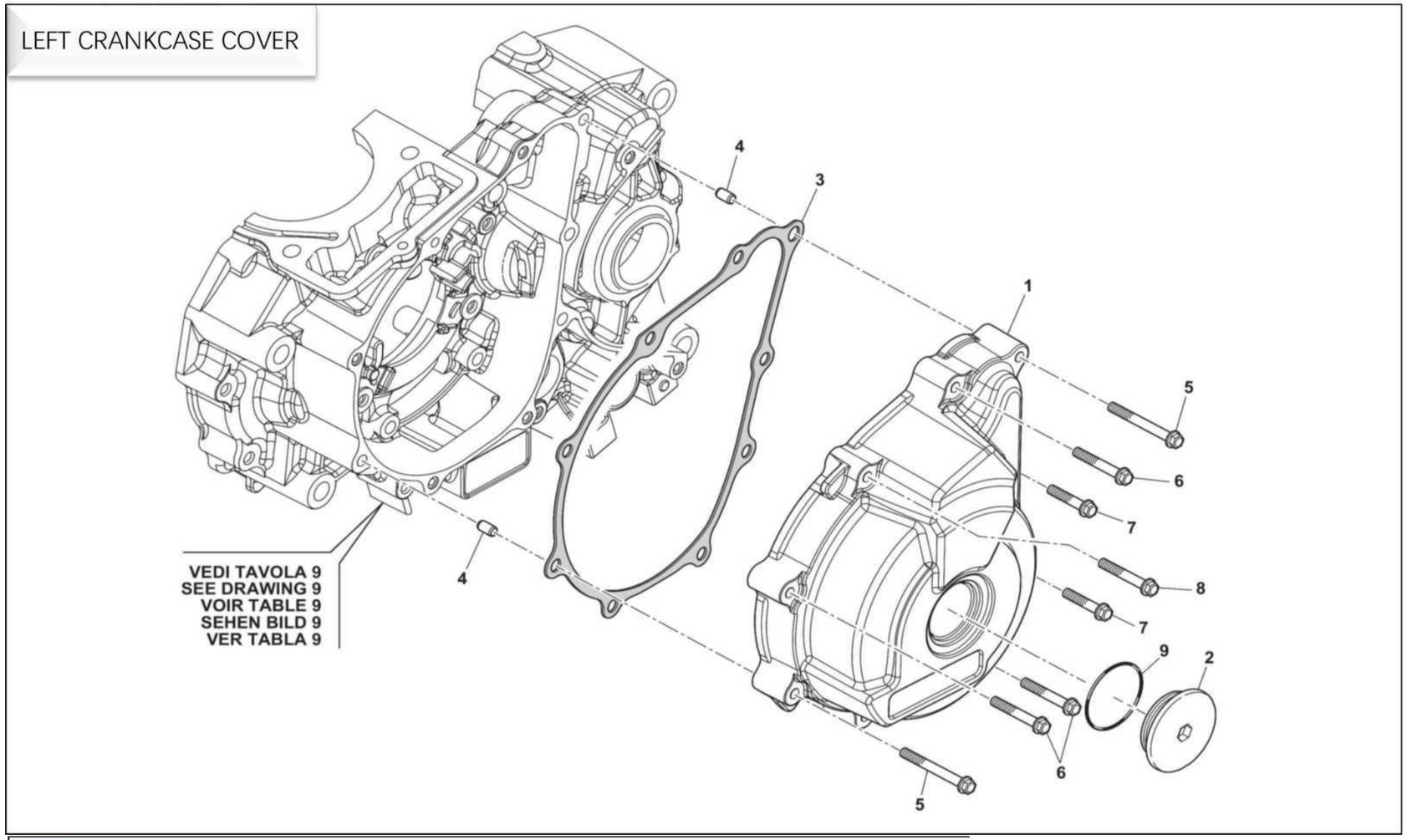

LEFT CRANKCASE COVER

| Notes | No | Code No | NAME | Qty | |
|---|---|---|---|---|---|
| | 1 | 14011082 | IGNITION COVER | 1 | |
| | 2 | 14060081 | LOIL SEAL RETAINER | 1 | |
| | 3 | 72130624 | LEFT CRANKCASE COVER GASKET | 1 | |
| | 4 | 72060012 | DOWEL PIN 08x14 | 2 | |
| | 5 | 72010390 | BOLT M6x45 | 2 | |
| | 6 | 72010169 | BOLT M6x35 | 4 | |
| | 7 | 72010387 | BOLT M6x28 | 2 | |
| | 8 | 72010388 | BOLT M6x32 | 1 | |
| | 9 | 72150152 | O-RING- 27.4x2.65 | 1 | |
| | | | | | |
| | | | | | |
| | | | | | |
| | | | | | |
| | | | | | |
| | | | | | |
| | | | | | |
| | | | | | |
| | | | | | |
| | | | | | |
| | | | | | |
| | | | | | |
| | | | | | |
| | | | | | |
| | | | | | |

## LEFT HALF CRANKCASE

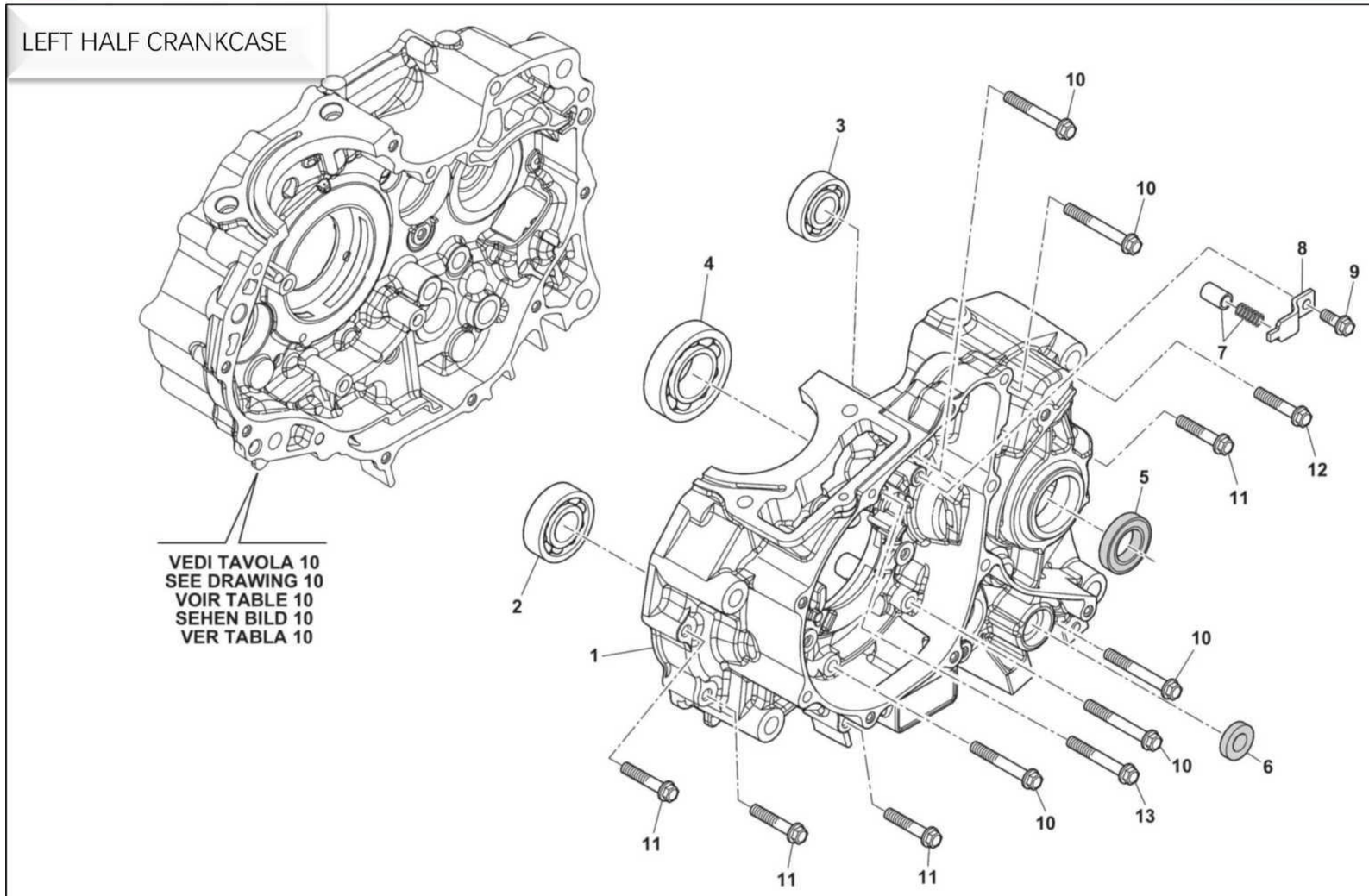

LEFT HALF CRANKCASE

| Notes | No | Code No | NAME | Qty | |
|---|---|---|---|---|---|
| | 1 | 11010698 | LEFT CRANKCASE | 1 | |
| | 2 | 70090249 | BEARING COUNTERSHAFT | 1 | |
| | 3 | 70090137 | 020047x14 OUTPUT SHAFT BEARING | 1 | |
| | 4 | 70090005 | 012x032x10 INPUT SHAFT BEARIN | 1 | |
| | 5 | 72110011 | 020x034x7 SEALING RING | 1 | |
| | 6 | 72110012 | SEALING RING 014x22x5 | 1 | |
| | 7 | 11080005 | PUSH ROD + SPRING | 1 | |
| | 8 | 73131647 | PUSH ROD PLATE | 1 | |
| | 9 | 72010157 | SCREW M6x16 | 1 | |
| | 10 | 72010393 | FLANGED EXAGON HEAD SCREW M6x70 | 5 | |
| | 11 | 72010389 | FLANGED EXAGON HEAD SCREW M6x40 | 6 | |
| | 12 | 72010169 | FLANGED EXAGON HEAD SCREW M6x35 | 1 | |
| | 13 | 72010392 | FLANGED EXAGON HEAD SCREW M6x65 | 1 | |

RIGHT HALF CRANKCASE

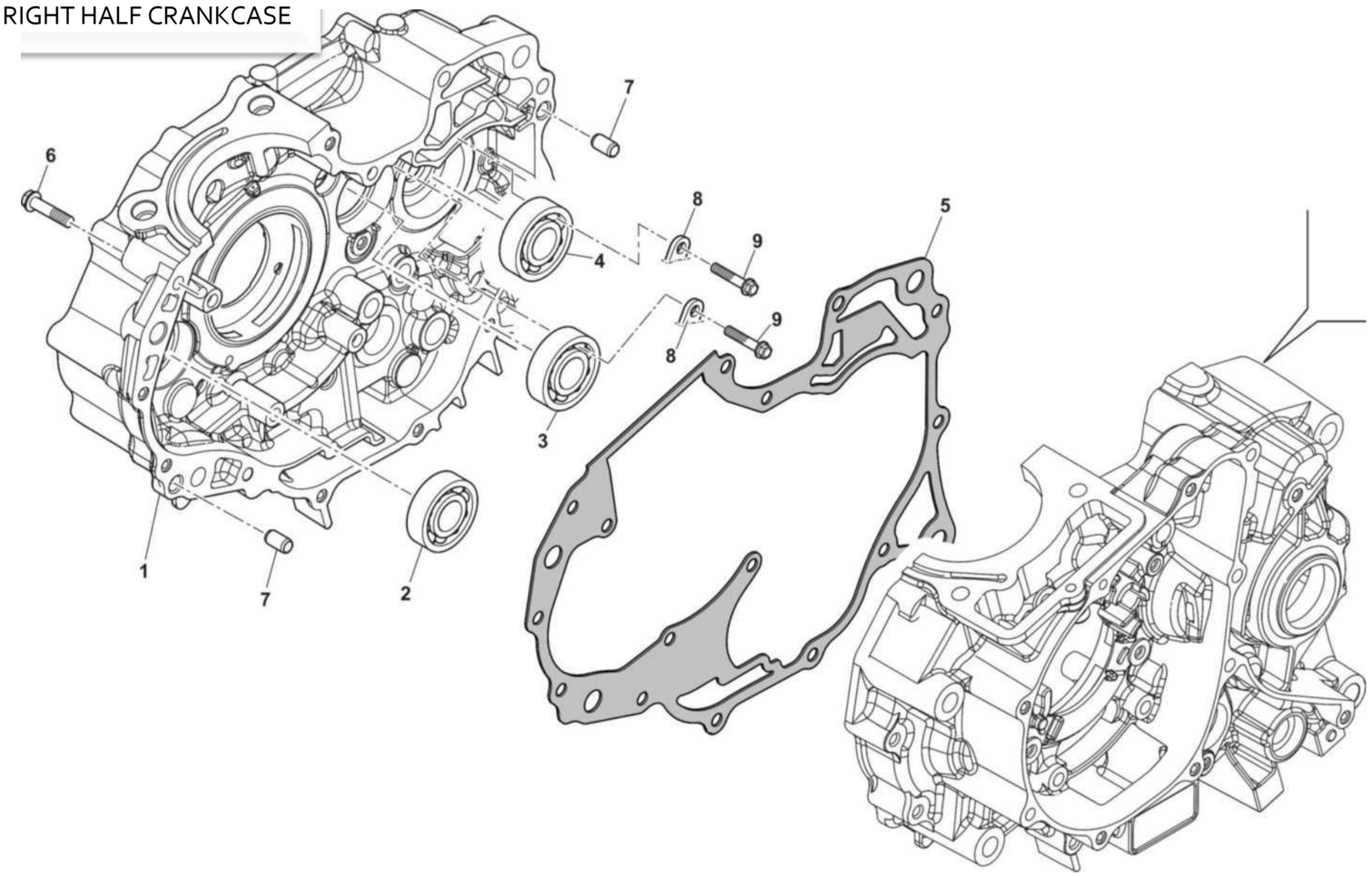

RIGHT HALF CRANKCASE

| Notes | No | Code No | NAME | Qty | |
|---|---|---|---|---|---|
| | 1 | 12010652 | RIGHT CRANKCASE | 1 | |
| | 2 | 70090249 | BEARING COUNTERSHAFT | 1 | |
| | 3 | 70090011 | 017x040x12 INPUT SHAFT BEARING | 1 | |
| | 4 | 70090138 | 017040x12 OUTPUT SHAFT BEARING | 1 | |
| | 5 | 72130610 | GASKET CRANKCASE | 1 | |
| | 6 | 72010390 | FLANGED EXAGON HEAD SCREW M6x45 | 1 | |
| | 7 | 72060012 | DOWEL PIN 08x14 | 2 | |
| | 8 | 73131276 | BEARING PRESSURE PLATE | 2 | |
| | 9 | 72010157 | FLANGED EXAGON HEAD SCREW M6x16 | 2 | |

VEDI TAVOLA 9
SEE DRAWING
9 VOIR TABLE
9 SEHEN BILD9
VER TABLA 9

## CLUTCH

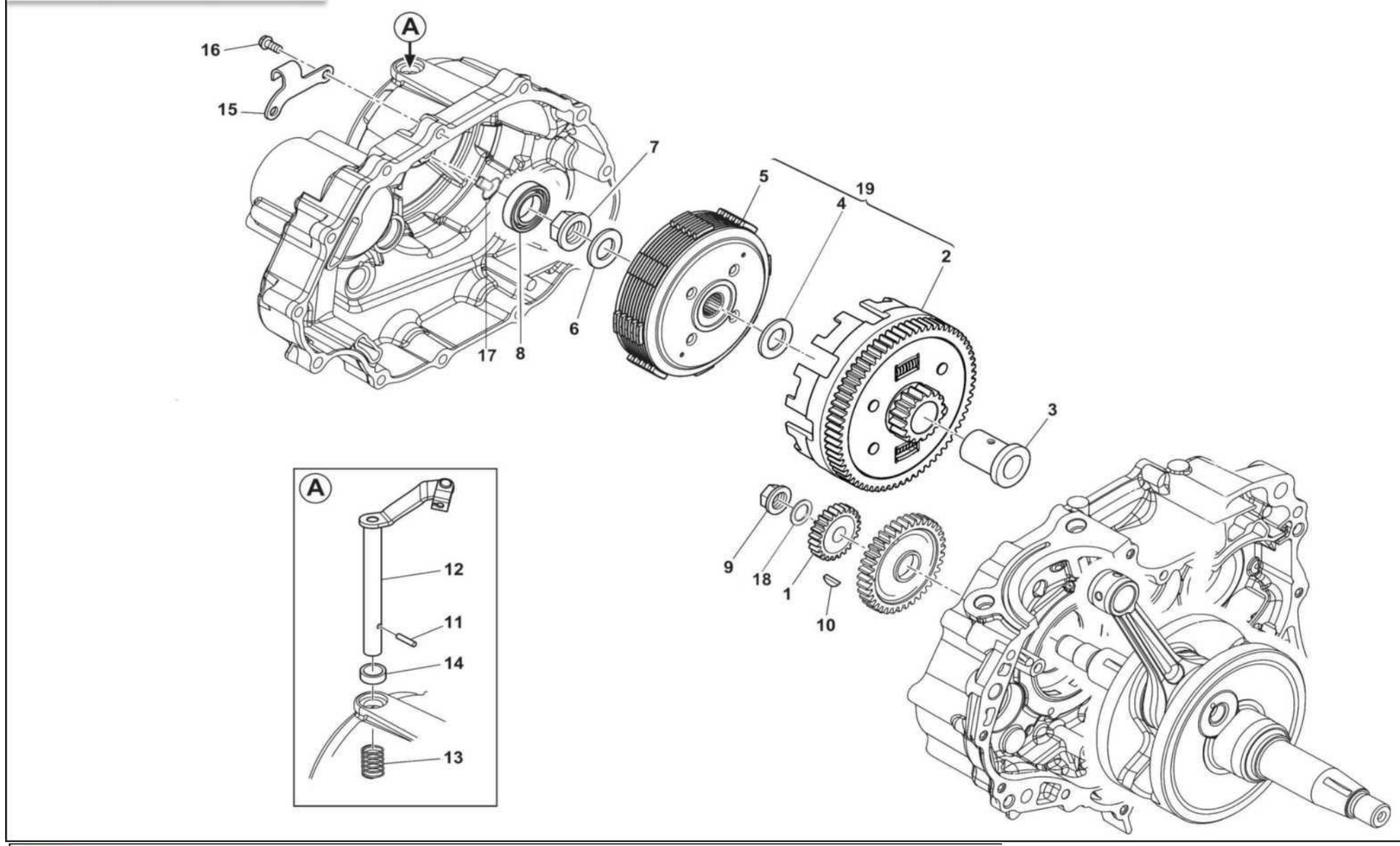

CLUTCH

| Notes | No | Code No | NAME | Qty | |
|---|---|---|---|---|---|
| | 1 | 24020060 | DRIVE GEAR | 1 | |
| | 2 | 24070311 | CLUTCH COVER | 1 | |
| | 3 | 24070155 | BUSHING-17x35.6 | 1 | |
| | 4 | 24070312 | CLUTCH WASHER-017.2x030x2.5 | 1 | |
| | 5 | 24070248 | CLUTCH CENTER SLEEVE ASSEMBLY | 1 | |
| | 6 | 24070219 | CLUTCH WASHER- 014.2 x026 x 2.8 | 1 | |
| | 7 | 24070221 | LOCKING NUT- M14x1 | 1 | |
| | 8 | 24070223 | ROLLING BEARING-6003 | 1 | |
| | 9 | 72020546 | LOCKING NUT- M14x1 | 1 | |
| | 10 | 21210013 | CRANKSHAFT WOODRUFF KEY | 1 | |
| | 11 | 72060031 | DOWEL PIN-03x12 | 1 | |
| | 12 | 24030070 | CLUTCH OPERATING LEVER | 1 | |
| | 13 | 72120103 | CLUTCH LEVER SPRING | 1 | |
| | 14 | 72110024 | CLUTCH LEVER OIL SEAL | 1 | |
| | 15 | 73131855 | PLATE | 1 | |
| | 16 | 72010387 | BOLT M6X28 | 2 | |
| | 17 | 24070220 | CLUTCH PUSH-ROD | 1 | |
| | 18 | 72040463 | IRON WASHER-014.2x029x2.8 | 1 | |
| | 19 | 24120170 | CLUTCH BADY | 1 | |
| | | | | | |
| | | | | | |
| | | | | | |
| | | | | | |
| | | | | | |
| | | | | | |

## GEARSHIFT MECHANISM

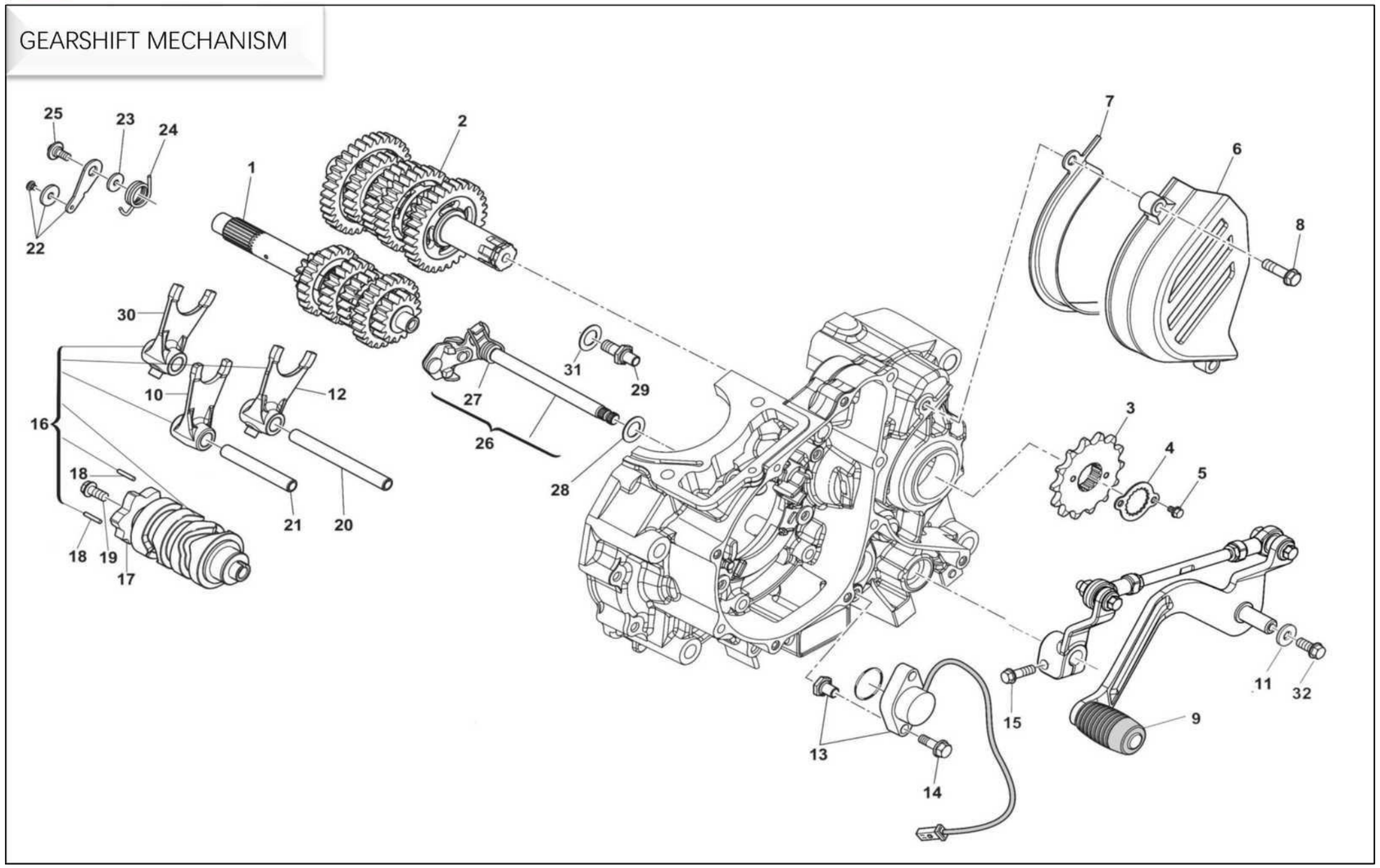

GEARSHIFT MECHANISM

| Notes | No | Code No | NAME | Q.ty | |
|---|---|---|---|---|---|
| | 1 | 15020130 | MAIN SHAFT ASSY | 1 | |
| | 2 | 15030170 | COUNTERSHAFT ASSY | 1 | |
| | 3 | 15170128 | OUTPUT CHAIN WHEEL | 1 | |
| | 4 | 73130522 | OUTPUT SPROCKET RETAINER PLATE | 1 | |
| | 5 | 72010090 | BOLT- M6x10 | 2 | |
| | 6 | M000P00335 | SPROCKET COVER | 1 | |
| | 7 | M000P00336 | ENGINE CHAIN PROTECTION BRACKET | 1 | |
| | 8 | 10000349 | BOLT- M6-L20 | 2 | |
| | 9 | F000A03411 | GEAR CONTROL LEVER ASSY | 1 | |
| | 10 | 15140055 | 5TH AND 6TH GEAR FORK | 1 | |
| | 11 | Z00045499 | FLANGED BUSHING | 1 | |
| | 12 | 15140053 | 2ND AND 3RD GEAR FORK | 1 | |
| | 13 | 11040208 | NEUTRAL POSITION SWITCH | 1 | |
| | 14 | 72010163 | BOLT M6x25 | 2 | |
| | 15 | 10000349 | FLANGED EXAGON HEAD SCREW M6x20 | 1 | |
| | 16 | 15050080 | SELECTOR SHAFT | 1 | |
| | 17 | 15090014 | GEAR SELECTOR DRUM | 1 | |
| | 18 | 15180039 | PIN-3 x 8.5 | 2 | |
| | 19 | 72010094 | BOLT M6x20 | 1 | |
| | 20 | 15140041 | FORK PIN | 1 | |
| | 21 | 15140042 | FORK PIN | 1 | |
| | 22 | 15080023 | SELECTOR LOCK PLATE | 1 | |
| | 23 | 72040676 | WASHER | 1 | |
| | 24 | 72120121 | SPRING | 1 | |
| | 25 | 72011366 | BOLT | 1 | |
| | 26 | 15070072 | SELECTOR SHAFT ASSY | 1 | |

## GEARSHIFT MECHANISM

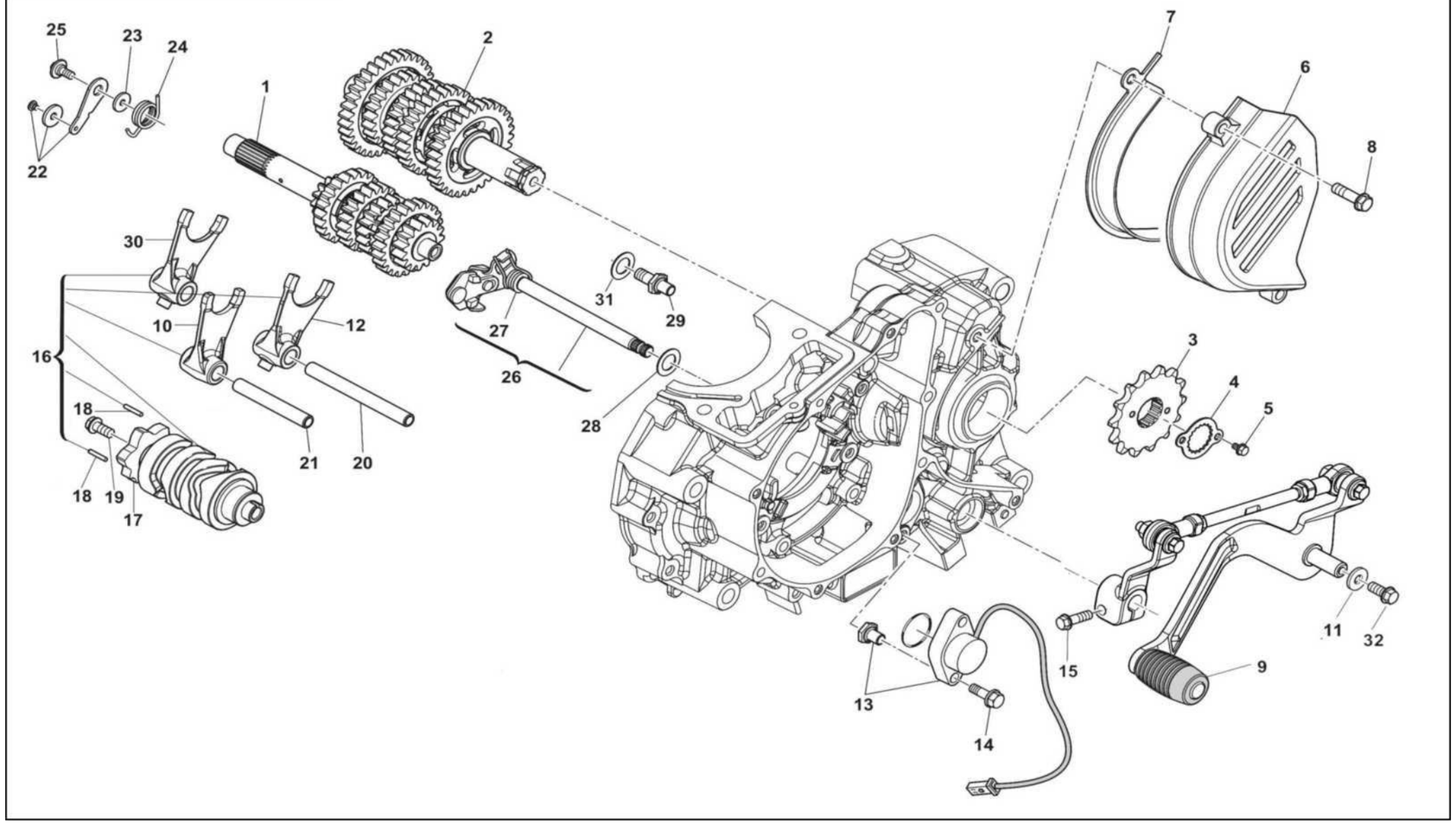

GEARSHIFT MECHANISM

| Notes | No | Code No | NAME | Qty | |
|---|---|---|---|---|---|
| | 27 | 15130036 | SPRING | 1 | |
| | 28 | 15130037 | WASHER | 1 | |
| | 29 | 72011772 | SELECTOR LOCK PIN | 1 | |
| | 30 | 15140054 | 1ST, 4TH GEAR FORK | 1 | |
| | 31 | 72040567 | WASHER | 1 | |
| | 32 | 10000348 | FLANGED EXAGON HEAD SCREW M6x16 | 1 | |

IGNITION SISTEM

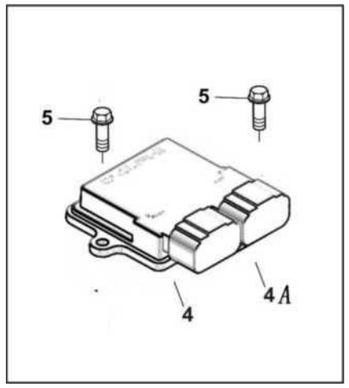


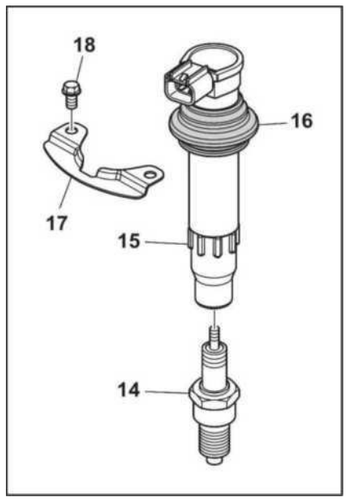


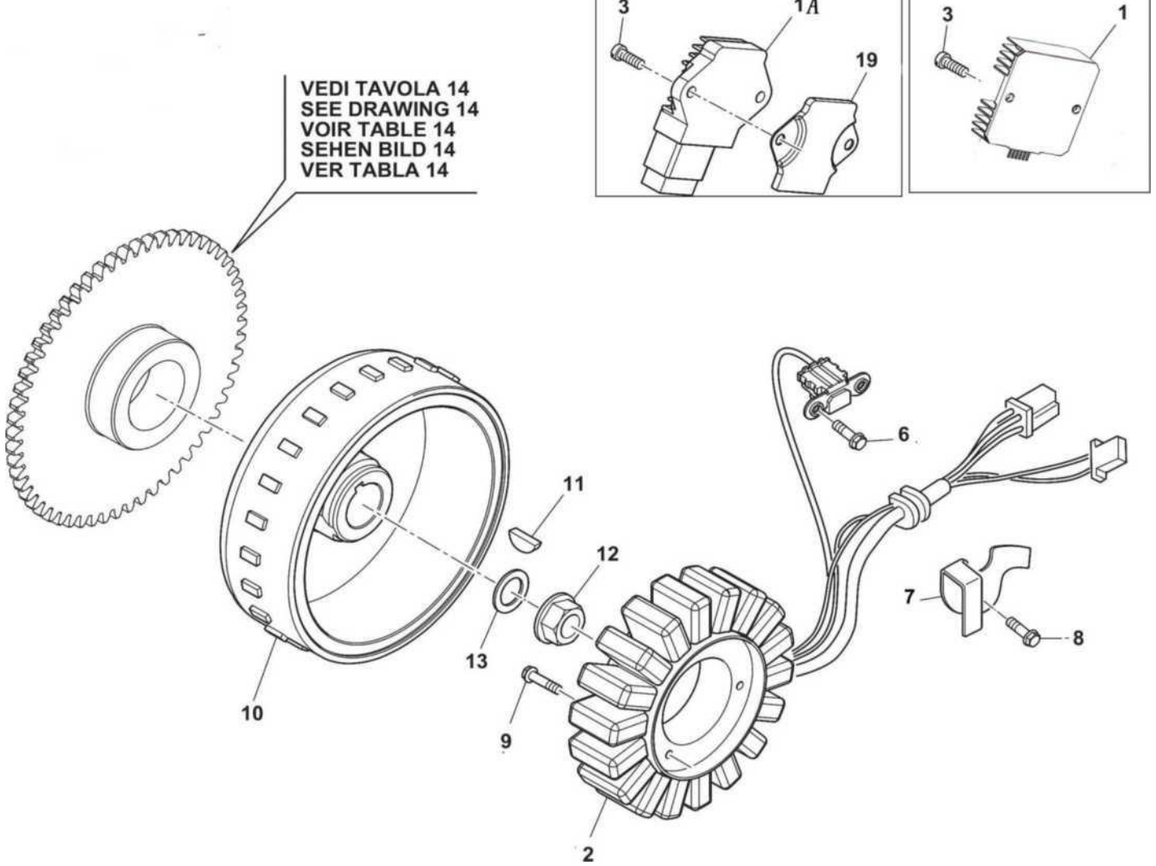

IGNITION SISTEM

| Notes | No | Code No | NAME | Qty | |
|---|---|---|---|---|---|
| | 1 | 10000254 | VOLTAGE REGULATOR | 1 | |
| **LXYPDJLO** | 1A | 8000B0563 | VOLTAGE REGULATOR | 1 | |
| | 2 | 31140381 | STATOR | 1 | |
| | 3 | 10000349 | FLANGED EXAGON HEAD SCREW M6x20 | 2 | |
| | 4 | 31350187 | PROGRAMMED CONTROL UNIT | 1 | |
| **OUTLAW 125 ACE OF SPADES 125R** | 4A | 31350194 | PROGRAMMED CONTROL UNIT | 1 | |
| | 5 | 10000347 | BOLT M6x14 | 2 | |
| | 6 | 72010157 | FLANGED EXAGON HEAD SCREW M6x16 | 2 | |
| | 7 | 73131651 | PLATE | 1 | |
| | 8 | 72010157 | FLANGED EXAGON HEAD SCREW M6x16 | 1 | |
| | 9 | 72010386 | FLANGED EXAGON HEAD SCREW M6x22 | 3 | |
| | 10 | 31150203 | ROTOR | 1 | |
| | 11 | 21210013 | WOODRUFF KEY | 1 | |
| | 12 | 72020426 | FLANGED NUT | 1 | |
| | 13 | 72040463 | WASHER14.2x29x2.8 | 1 | |
| | 14 | 31170039 | SPARK PLUG NGK CR8E | 1 | |
| | 15 | 10000016 | COIL | 1 | |
| | 16 | 73012716 | RUBBER RING | 1 | |
| | 17 | 73131652 | PLATE | 1 | |
| | 18 | 72012186 | FLANGED EXAGON HEAD SCREW M5x10 | 2 | |
| **LXYPDJLO** | 19 | F000P03789 | HEAT DISSIPATION PLATE | 1 | |
| | | | | | |
| | | | | | |
| | | | | | |
| | | | | | |
| | | | | | |

STARTING

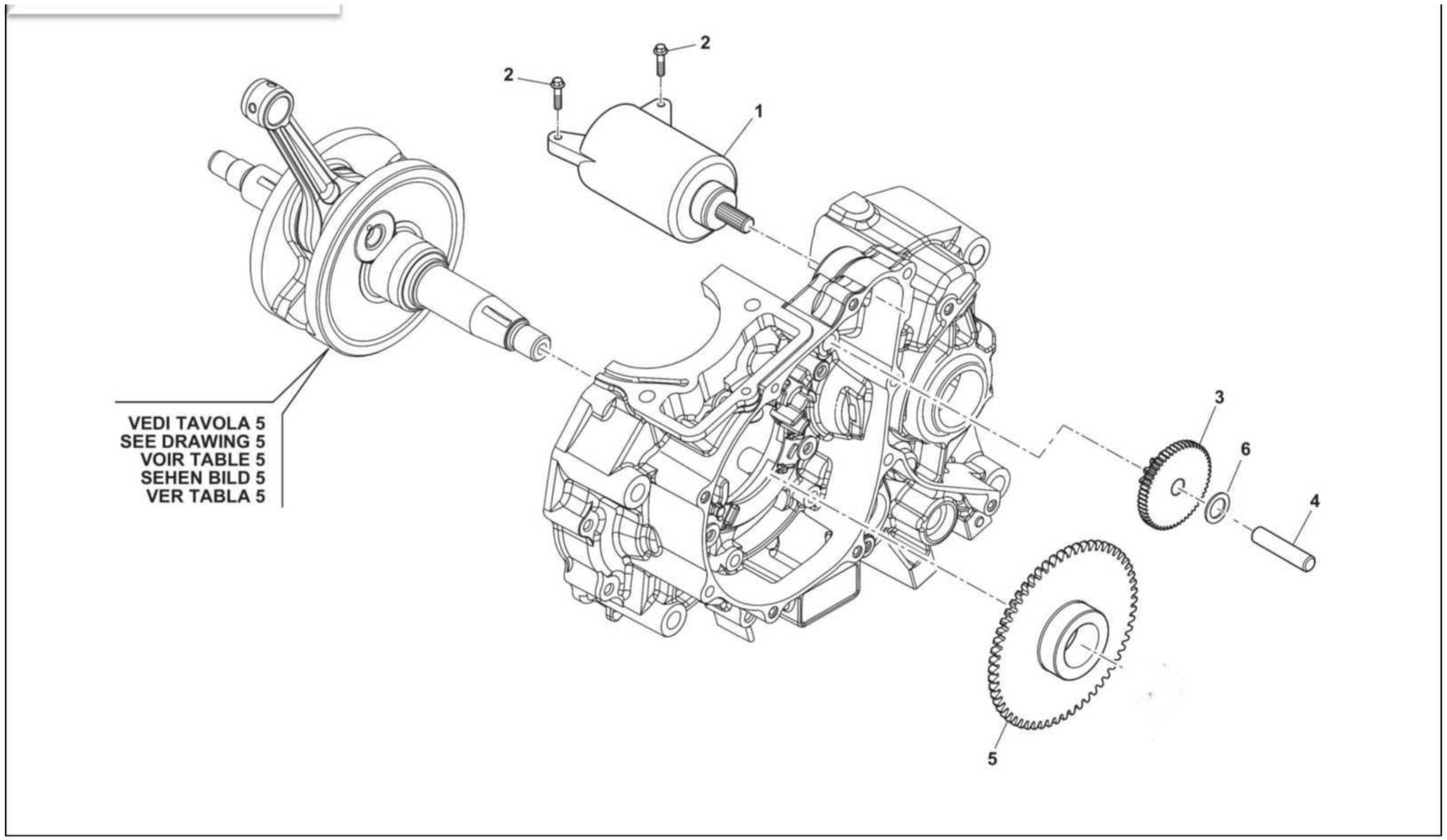
2
2
1
VEDI TAVOLA 5
SEE DRAWING 5
VOIR TABLE 5
SEHEN BILD 5
VER TABLA 5
3
6
4
5

STARTING

| Notes | No | Code No | NAME | Qty | |
|---|---|---|---|---|---|
| | 1 | 31160513 | STARTER MOTOR | 1 | |
| | 2 | 72011196 | BOLT M6x25 | 2 | |
| | 3 | 15110038 | DUALGEAR | 1 | |
| | 4 | 24080021 | AXLE,DUAL-GEAR | 1 | |
| | 5 | 15110061 | CHAIN SPROCKET T=58 | 1 | |
| | 6 | 72040668 | WASHER 10x18x2 | 1 | |

## THROTTLE BODY

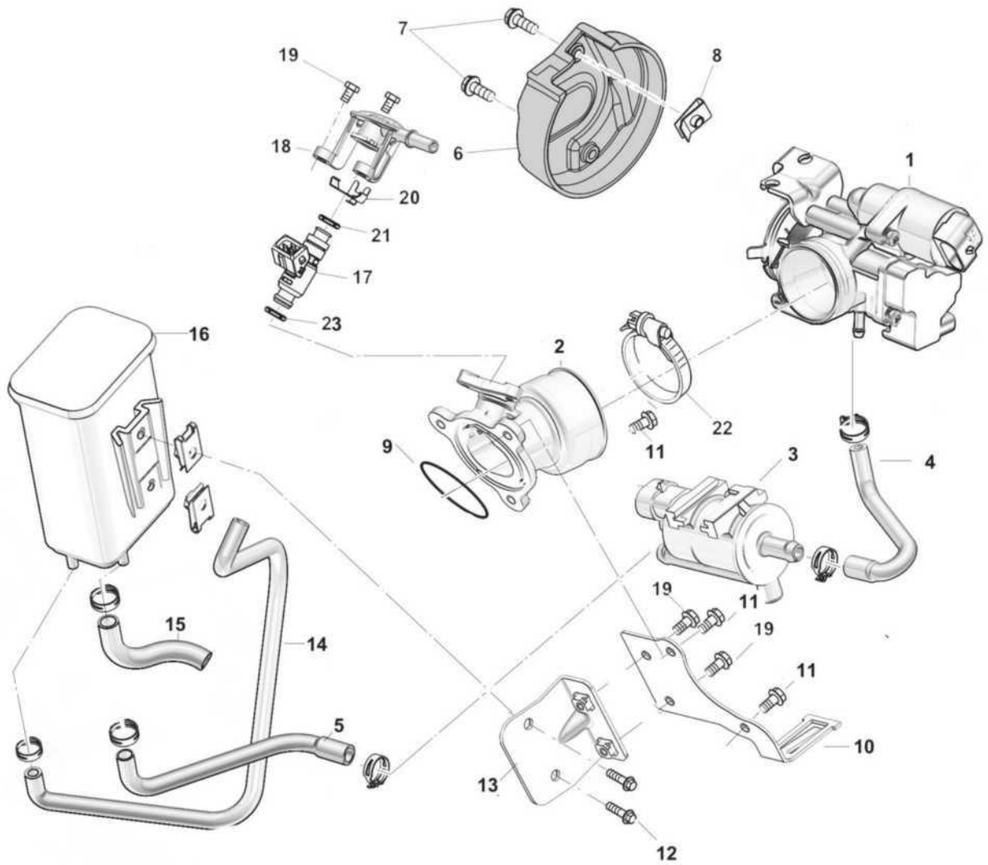

THROTTLE BODY

| Notes | No | Code No | NAME | Q.ty | |
|---|---|---|---|---|---|
| | 1 | M000A04435 | THROTTLE BODY ASSY | 1 | |
| | 2 | M000P04450 | THROTTLE BODY UNION | 1 | |
| | 3 | 31350090 | SOLENOID VALVE | 1 | |
| | 4 | F000P04537 | DESORPTION HOSE I | 1 | |
| | 5 | F000P04536 | DESORPTION HOSE II | 1 | |
| | 6 | F000P00855 | COVER | 1 | |
| | 7 | 10000361 | FLANGED EXAGON HEAD SCREW M5x16 | 2 | |
| | 8 | 8000H2168 | CLIP NUT M5 | 1 | |
| | 9 | M000P01554 | O-RING | 1 | |
| | 10 | F000P04534 | SOLENOID VALVE BRACKET | 1 | |
| | 11 | 10000349 | FLANGED EXAGON HEAD SCREW M6x20 | 3 | |
| | 12 | 10000346 | FLANGED EXAGON HEAD SCREW M6x10 | 2 | |
| | 13 | F000P04533 | SOLENOID VALVE BRACKET | 1 | |
| | 14 | 10000076 | ADSORPTION OF RUBBER HOSE | 1 | |
| | 15 | F000P04538 | PIPE | 1 | |
| | 16 | E000P04447 | CHARCOAL CANISTER | 1 | |
| | 17 | 31350179 | INJECTOR | 1 | |
| | 18 | E000P04443 | INJECTOR CAP | 1 | |
| | 19 | 10000347 | FLANGED EXAGON HEAD SCREW M6x14 | 4 | |
| | 20 | F000P00852 | CLIP | 1 | |
| | 21 | 10000219 | O-RING | 1 | |
| | 22 | 10000166 | CLAMP | 1 | |
| | 23 | 10000218 | O-RING | 1 | |
| | | | | | |
| | | | | | |
| | | | | | |

## AIR FILTER

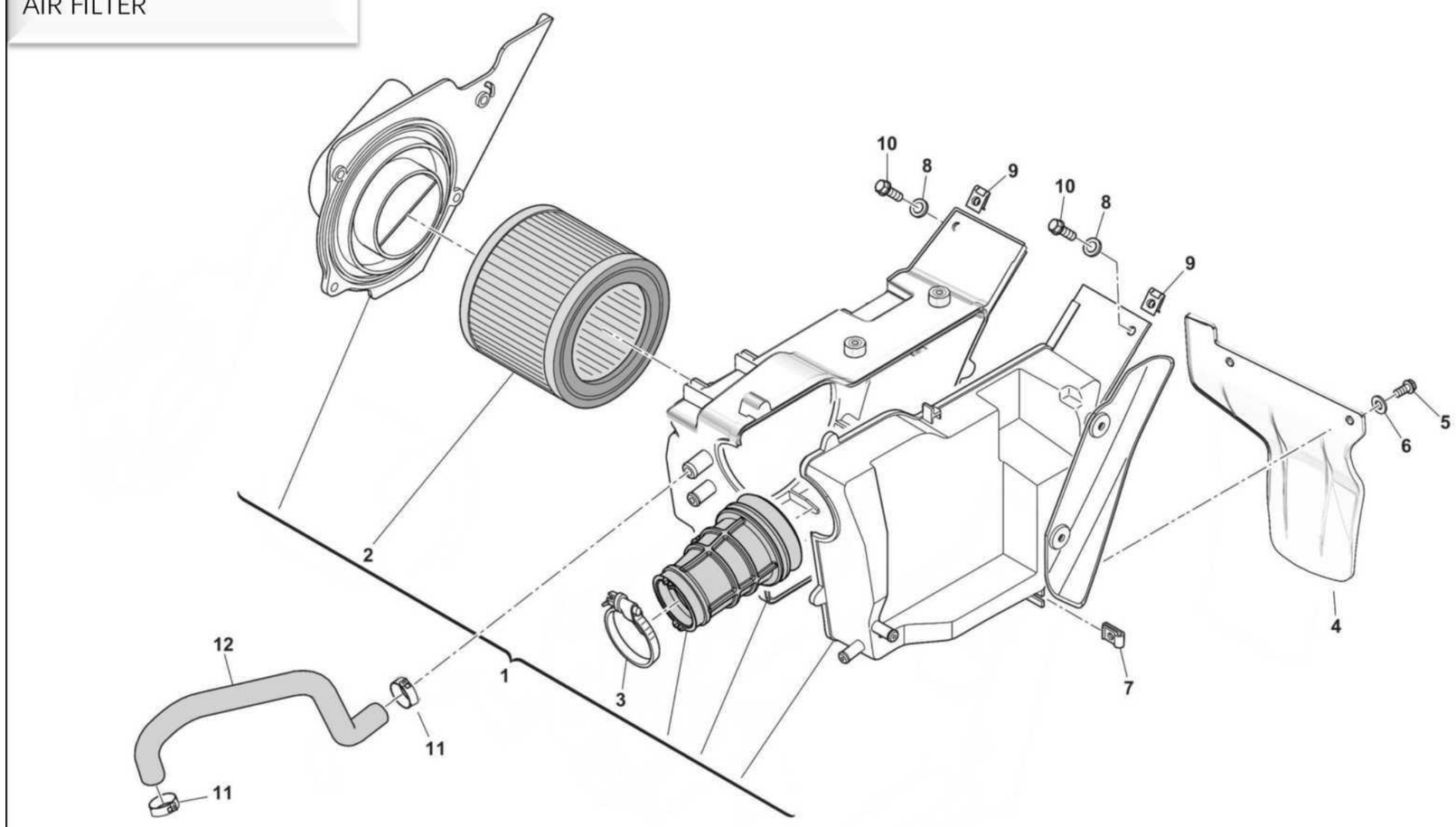

AIR FILTER

| Notes | No | Code No | NAME | Qty | |
|---|---|---|---|---|---|
| | 1 | 10000240 | AIR FILTER BOX | 1 | |
| | 2 | 18130045 | AIR FILTER | 1 | |
| | 3 | 18170097 | METALLIC CLIP TJBC 40-60 | 1 | |
| | 4 | F000P04105 | INTERNAL REAR MUDGUARD | 1 | |
| | 5 | 10000355 | FLANGED EXAGON HEAD SCREW M5x12 | 2 | |
| | 6 | 62ND15548 | WASHER | 3 | |
| | 7 | U00055134 | CLIP NUT M5 | 2 | |
| | 8 | Z00021535 | WASHER | 2 | |
| | 9 | U00046893 | CLIP NUT M6 | 2 | |
| | 10 | 10000348 | FLANGED EXAGON HEAD SCREW M6x16 | 2 | |
| | 11 | 8A0092249 | CLAMP | 2 | |
| | 12 | F000P03790 | OIL BREATHER PIPE | 1 | |
| | | | | | |
| | | | | | |
| | | | | | |
| | | | | | |
| | | | | | |
| | | | | | |
| | | | | | |
| | | | | | |
| | | | | | |
| | | | | | |
| | | | | | |
| | | | | | |
| | | | | | |
| | | | | | |

## COOLING SYSTEM

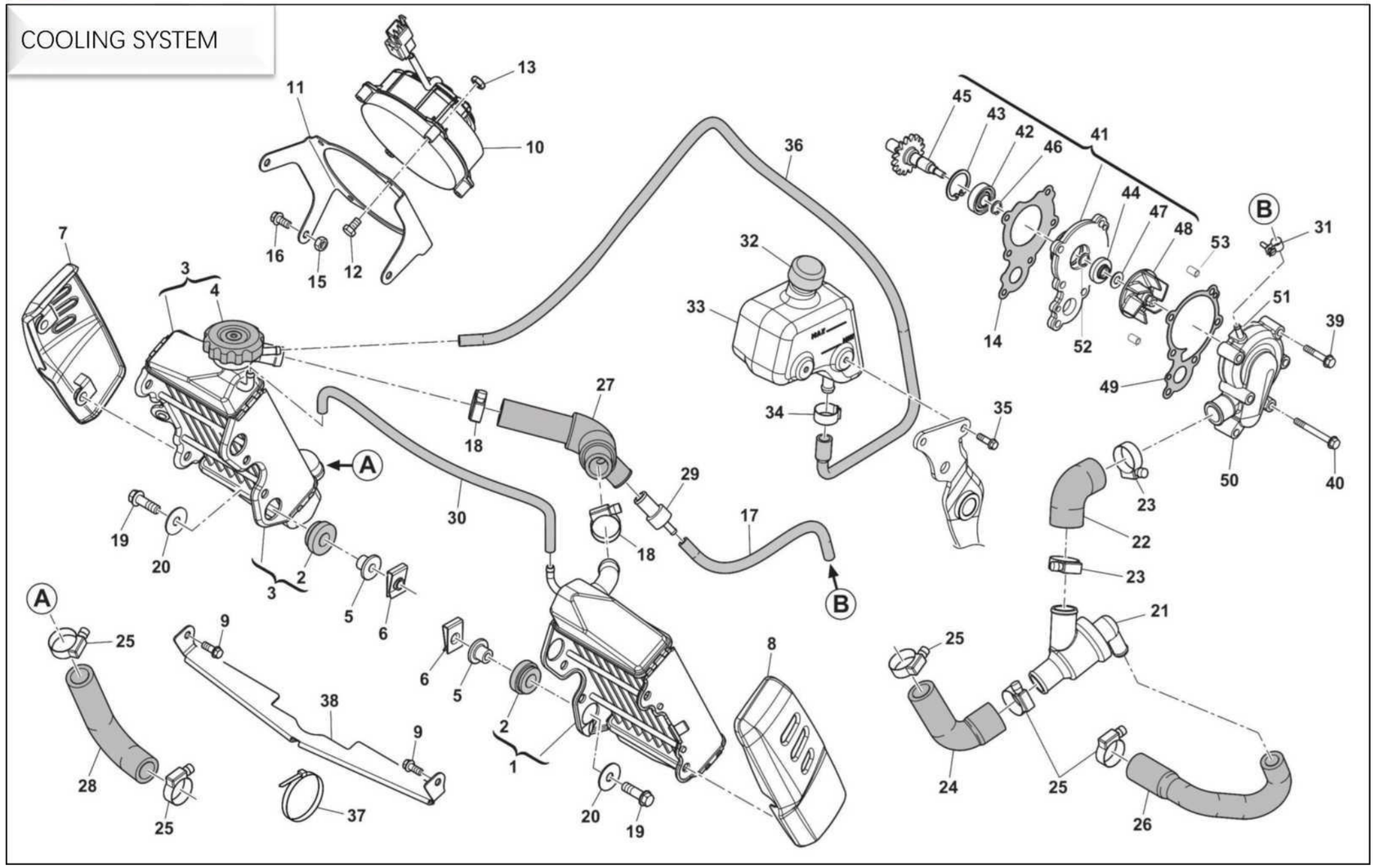

COOLING SYSTEM

| Notes | No | Code No | NAME | Qty | |
|---|---|---|---|---|---|
| | 1 | F000P03423 | L.H. RADIATOR | 1 | |
| | 2 | F000P00025 | RUBBER RING | 4 | |
| | 3 | F000A03422 | RIGHT RADIATOR | 1 | |
| | 4 | F000P03513 | PLUG | 1 | |
| | 5 | 8000B0263 | SPACER | 4 | |
| | 6 | 10000340 | CLIP NUT M6 | 4 | |
| | 7 | F000P03651 | COVER RADIATOR R.H. | 1 | |
| | 8 | FA00P03651 | COVER RADIATOR L.H. | 1 | |
| | 9 | ZH0067545 | SCREW M6x12 | 2 | |
| | 10 | 8000A7715 | ELECTRIC FAN | 1 | |
| | 11 | F000P03426 | SUPPORT | 1 | |
| | 12 | 60ND01030 | HEXAGON SOCKET-HEAD BOLT M4x25 | 4 | |
| | 13 | Z00040717 | SELF-LOCKING NUT M4 | 4 | |
| | 14 | 72130621 | BASE WATER PUMP GASKET | 1 | |
| | 15 | Z00044240 | SELF-LOCKING NUT M6 | 1 | |
| | 16 | ZH0067545 | SCREW M6x12 | 3 | |
| | 17 | 947200076 | PIPE | 1 | |
| | 18 | 10000539 | CLAMP | 2 | |
| | 19 | 10000347 | FLANGED EXAGON HEAD SCREW M6x14 | 4 | |
| | 20 | Z00059801 | WASHER | 4 | |
| | 21 | F000P03478 | THERMOSTAT | 1 | |
| | 22 | F000P03417 | PIPE | 1 | |
| | 23 | 8B0099475 | CLAMP HOP8-16/27 | 3 | |
| | 24 | F000P03418 | THERMOSTAT-RADIATOR PIPE | 1 | |
| | 25 | 10000536 | CLAMP HOP8-12/22 | 7 | |
| | 26 | F000P03419 | PIPE | 1 | |

## COOLING SYSTEM

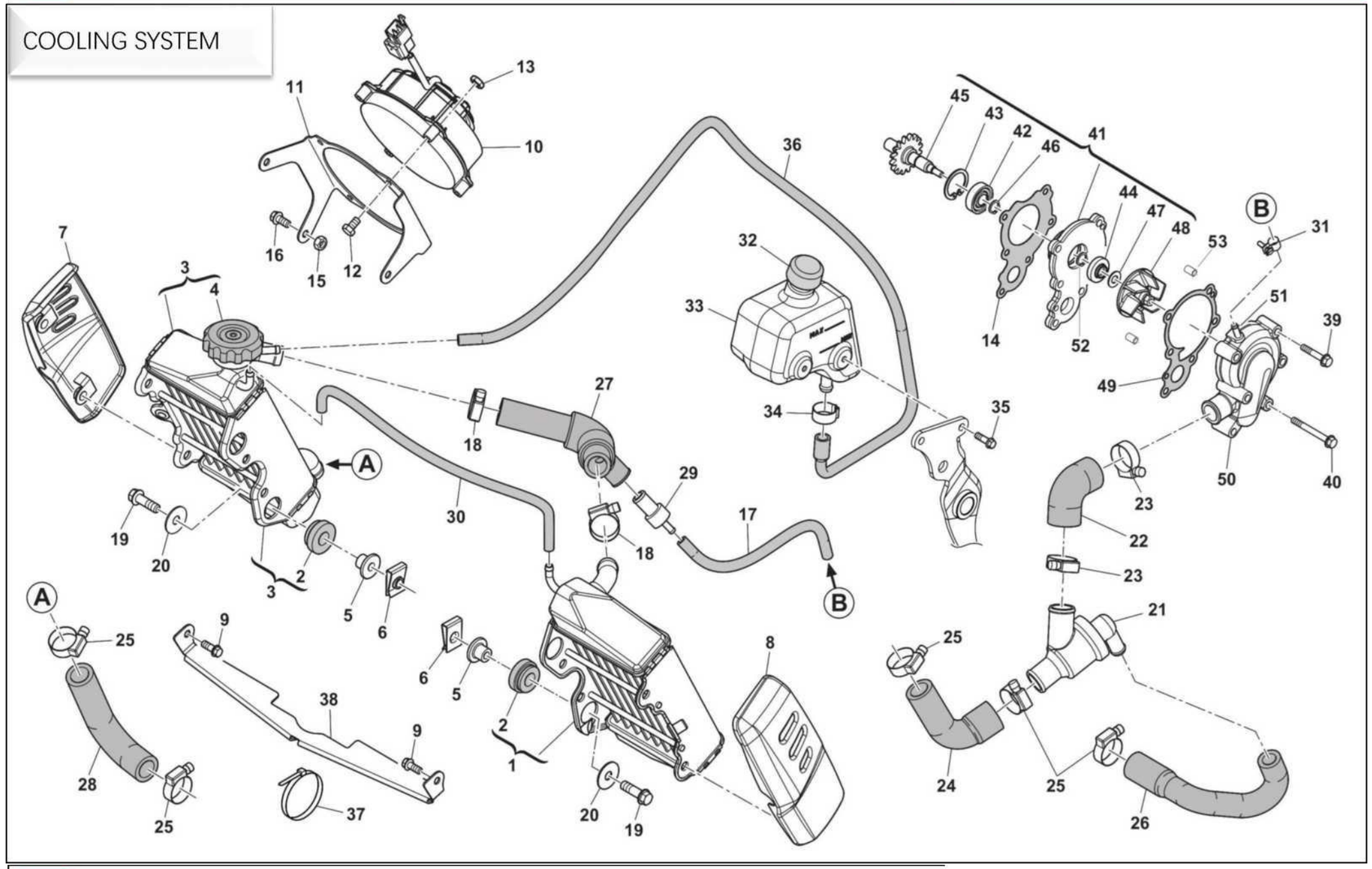

COOLING SYSTEM

| Notes | No | Code No | NAME | Q.ty | |
|---|---|---|---|---|---|
| | 27 | F000P03902 | RADIATOR CONNECTING PIPE | 1 | |
| | 28 | F000P03421 | PIPE | 1 | |
| | 29 | F000P03901 | UNION | 1 | |
| | 30 | 947200077 | PIPE L=230 | 1 | |
| | 31 | 8B00H1981 | CLAMP | 2 | |
| | 32 | 800040427 | PLUG | 1 | |
| | 33 | F000P03401 | EXPANSION TANK | 1 | |
| | 34 | 10000537 | CLAMP | 1 | |
| | 35 | ZE0067997 | FLANGED EXAGON HEAD SCREW | 2 | |
| | 36 | 8000A1281 | PI5x | 1 | |
| | 37 | F000P04023 | CLAMP | 1 | |
| | 38 | F000P03862 | DEFLECTOR | 1 | |
| | 39 | 72012184 | FLANGED EXAGON HEAD SCREW | 4 | |
| | 40 | 72012185 | MLANG ED EXAGON HEAD SCREW | 2 | |
| | 41 | 76220007 | MOMPLETE WATER PUMP | 1 | |
| | 42 | 17230008 | BEARING 6000 26x10x8 | 1 | |
| | 43 | 72080136 | INNER RETAINING RING | 1 | |
| | 44 | 17240008 | WATER PUMP OIL SEAL | 1 | |
| | 45 | 17220006 | WATER PUMP SHAFT | 1 | |
| | 46 | 72080135 | RETAINING RING | 1 | |
| | 47 | 17230009 | WASHER7x14.5x1 | 1 | |
| | 48 | 17230006 | WATER PUMP IMPELLER | 1 | |
| | 49 | 72130625 | PUMP COVER GASKET | 1 | |
| | 50 | 14140035 | WATER PUMP COVER | 1 | |
| | 51 | 17050013 | WATER PUMP COVER FITTING | 1 | |
| | 52 | 17010011 | CIRCLIP 010 | 1 | |

MOTORCYCLE PARTS LIST

FUEL TANK

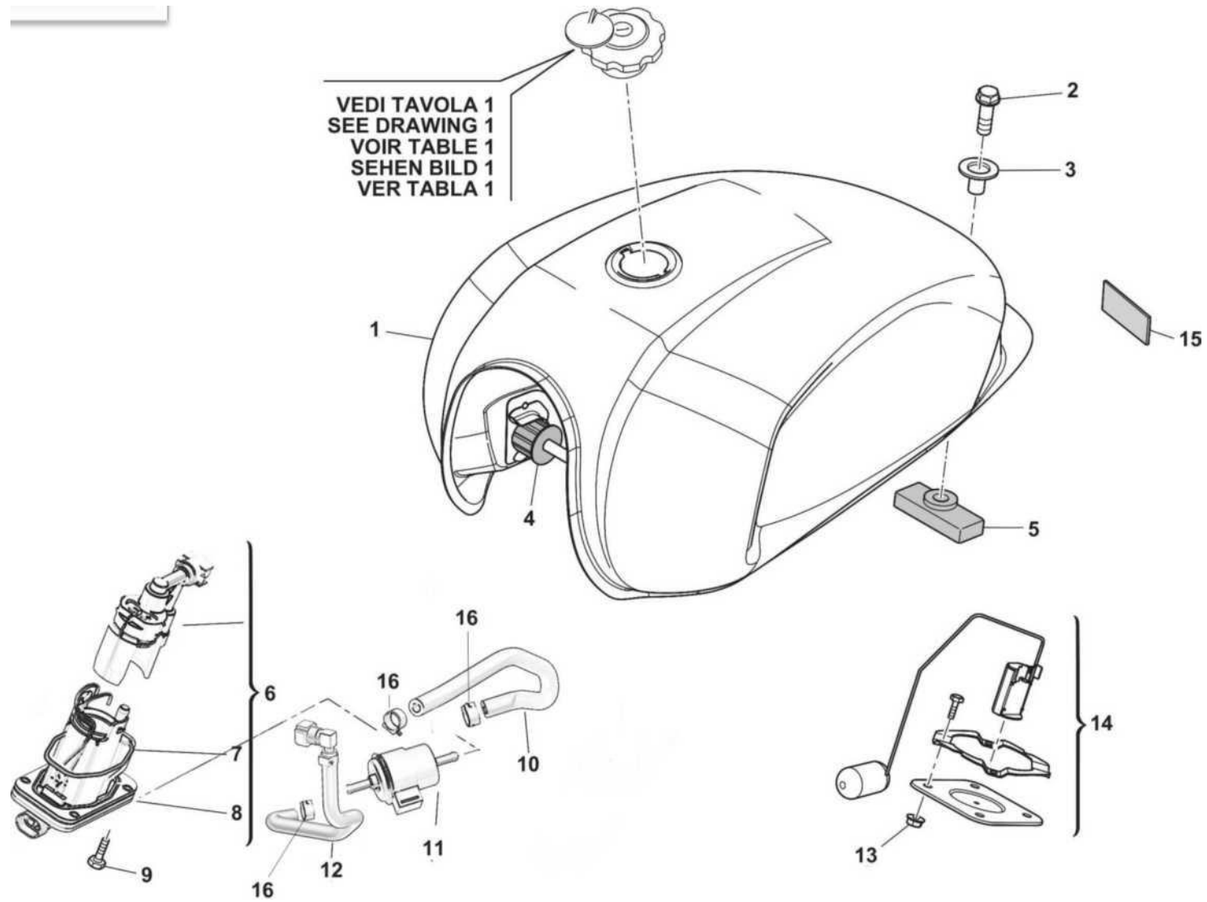

FUEL TANK

| Notes | No | Code No | NAME | Qty | |
|---|---|---|---|---|---|
| **OUTLAW 125** | 1 | F000A04377 | FUEL TANK ASSY | 1 | |
| **ACE OF SPADES 125**<br>**ACE OF SPADES 125R** | 1 | F000A04376 | FUEL TANK ASSY | 1 | |
| | 2 | 72010733 | FLANGED EXAGON HEAD SCREW M8x35 | 1 | |
| | 3 | 70120233 | BUSHING | 1 | |
| | 4 | F000P02483 | FRONT DAMPING MAT | 2 | |
| | 5 | F000P02482 | REAR DAMPING MAT | 1 | |
| | 6 | F000A03506 | FUEL PUMP | 1 | |
| | 7 | 73012580 | FUEL PUMP GASKET | 1 | |
| | 8 | 72130375 | METALLIC PLATE | 1 | |
| | 9 | 72030657 | BOLT M4x16 | 4 | |
| | 10 | 10000073 | PUMP- FUEL FILTER HOSE WITH CLIPS | 1 | |
| | 11 | F000P04412 | FUEL FILTER | 1 | |
| | 12 | 10000072 | FUEL FILTER-INJECTOR HOSE WITH CLIPS | 1 | |
| | 13 | 72020178 | SELF-LOCKING NUT M6 | 4 | |
| | 14 | F000A02332 | FUEL SENDER ASSY | 1 | |
| | 15 | 800037140 | SILENT-BLOCK ADHESIVE | 1 | |
| | 16 | 10000243 | CLAMP | 3 | |
| | | | | | |
| | | | | | |
| | | | | | |
| | | | | | |
| | | | | | |
| | | | | | |
| | | | | | |
| | | | | | |

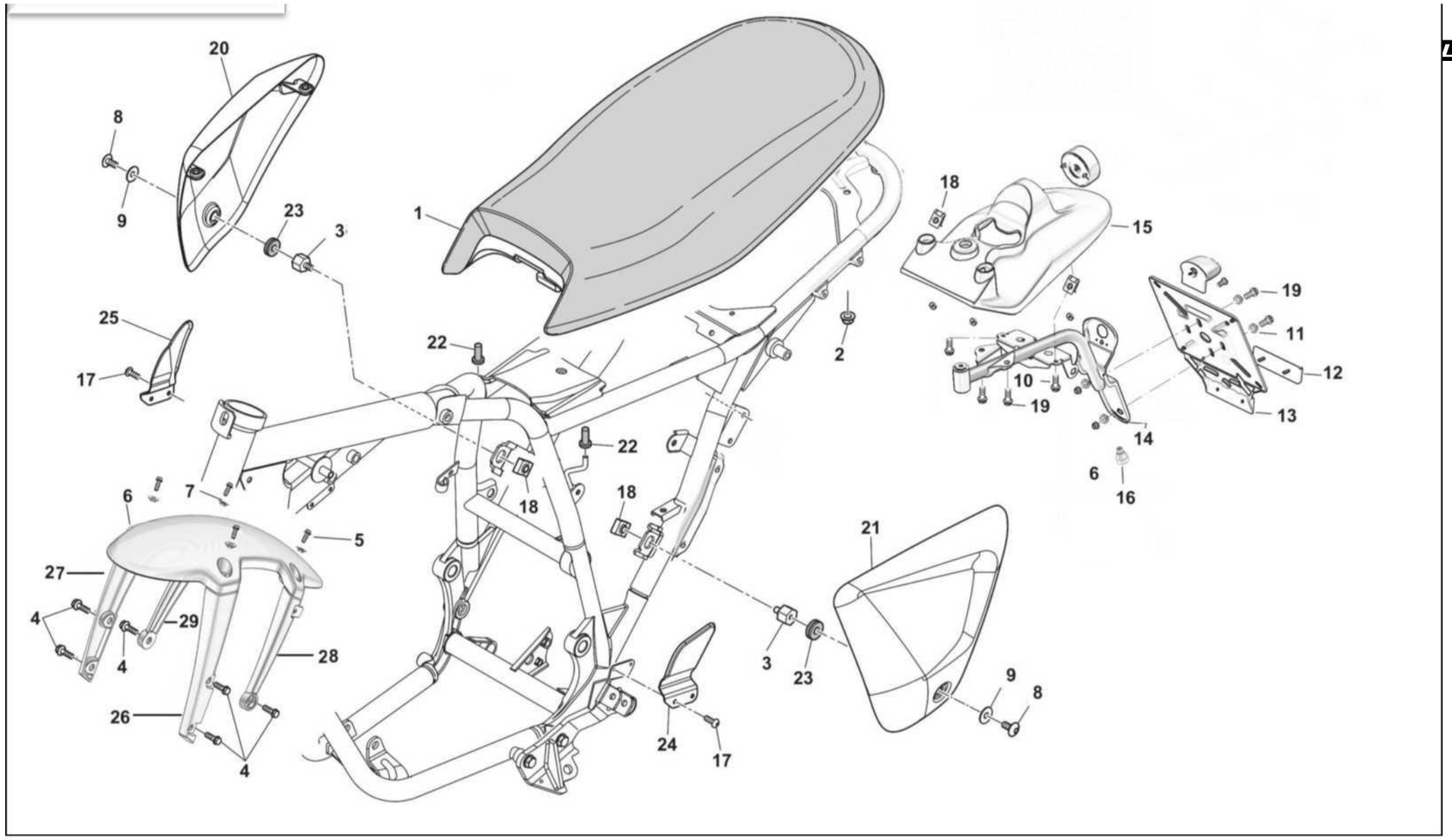
20
8
9
23
3
1
18
15
19
11
12
13
14
6
16
25
17
22
2
10
19
22
7
6
18
18
5
21
27
4
29
4
28
26
4
3
23
9
8
24
17

PANEL, FENDERS, SEA

| Notes | No | Code No | NAME | Q.ty | |
|---|---|---|---|---|---|
| **OUTLAW 125** | 1 | F000A04374 | SADDLE | 1 | |
| **ACE OF SPADES 125**<br>**ACE OF SPADES 125R** | 1 | F0A0A04374_P | SADDLE | 1 | |
| | 1 | FA00A03191 | SADDLE | 1 | |
| | 2 | 72020040 | SELF-LOCKING NUT M8 | 2 | |
| | 3 | F000P02610 | BUSHING | 2 | |
| | 4 | 10000355 | FLANGED EXAGON HEAD SCREW M5x12 | 6 | |
| | 5 | 10000348 | SILENT-BLOCK | 4 | |
| | 6 | F000P04319 | FRONT MUDGUARD | 1 | |
| | 7 | 8000H3017 | BUSHING | 4 | |
| | 8 | Z0C055703 | BOLT M6x14 | 2 | |
| | 9 | ZA0069429 | BUSHING | 2 | |
| | 10 | 10000347 | BOLT M6x14 | 2 | |
| | 11 | Z00021535 | WASHER | 4 | |
| | 12 | F000P04798 | SIDE REFLECTOR | 1 | |
| | 13 | 8000H3018 | PLATE HOLDER | 1 | |
| | 14 | 73280131 | REAR LICENSE PLATE BRACKET | 1 | |
| | 15 | 53170794 | REAR MUDGUARD | 1 | |
| | 16 | F000P04417 | PLUG | 1 | |
| | 17 | ZA0059572 | BOLT TBEI M5x12 | 4 | |
| | 18 | U00046893 | CLIP NUT | 4 | |
| | 19 | Z00062727 | BOLT M6x16 | 4 | |
| | 20 | F000P02301 | RIGHT SIDE PANEL | 1 | |
| | 21 | F000P02302 | LEFT SIDE PANEL | 1 | |
| | 22 | 73012510 | SILENT-BLOCK | 4 | |
| | 23 | 73012613 | BUSHING | 2 | |

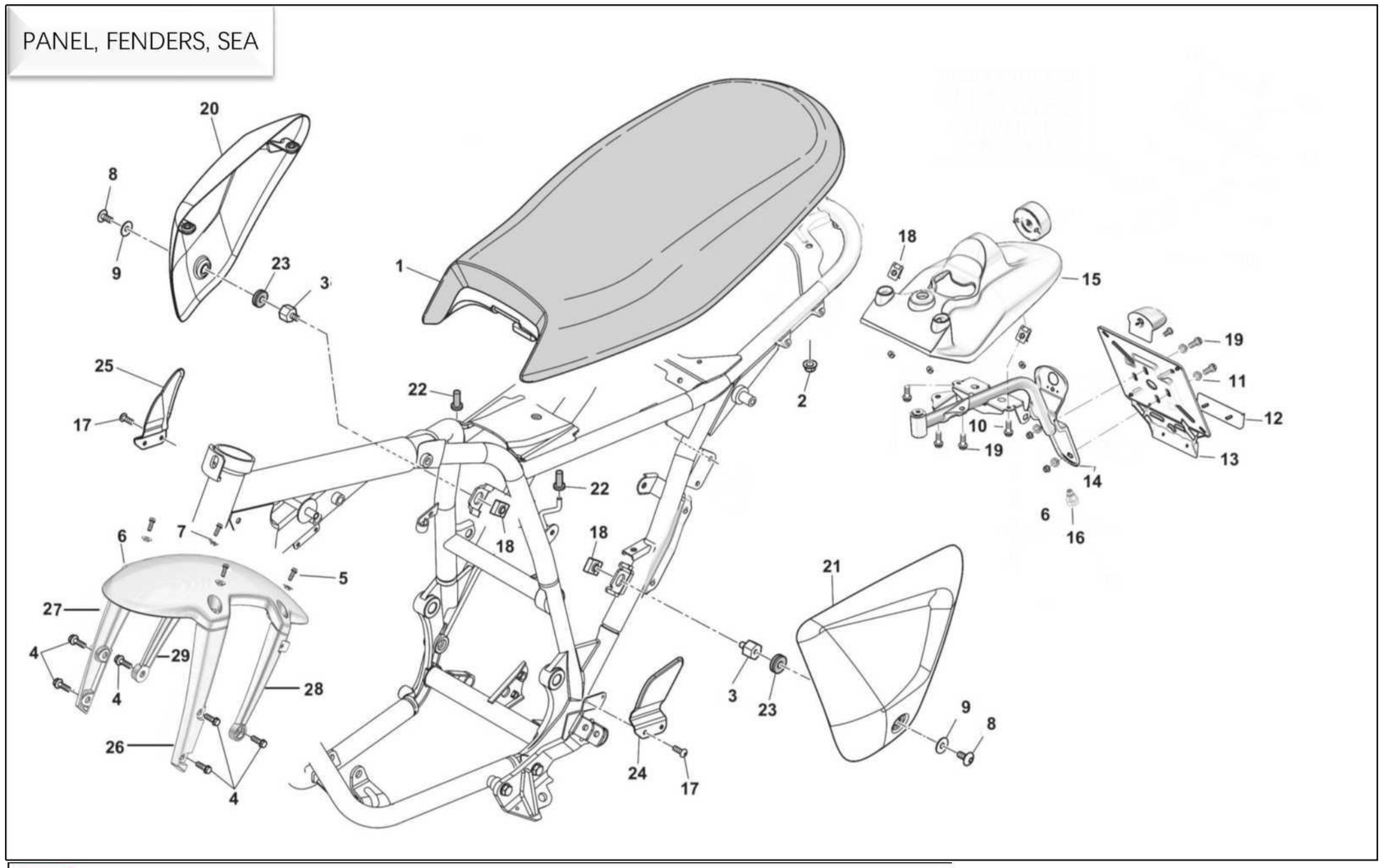


**ACE OF SPADES 125** **ACE OF SPADES 125R** **OUTLAW 125**

PANEL, FENDERS, SEA

| Notes | No | Code No | NAME | Qty | |
|---|---|---|---|---|---|
| | 24 | F000P03707 | L.H. PROTECTION | 1 | |
| | 25 | F000P03700 | R.H. PROTECTION | 1 | |
| | 26 | F000P04420 | LH FRONT FENDER LEG | 1 | |
| | 27 | FiiiPi4419 | RH FRONT FENDER LEG | 1 | |
| | 20 | FiiiPi4422 | LH REAR FENDER LEG | 1 | |
| | 29 | FiiiP04421 | RH REAR FENDER LEG | 1 | |

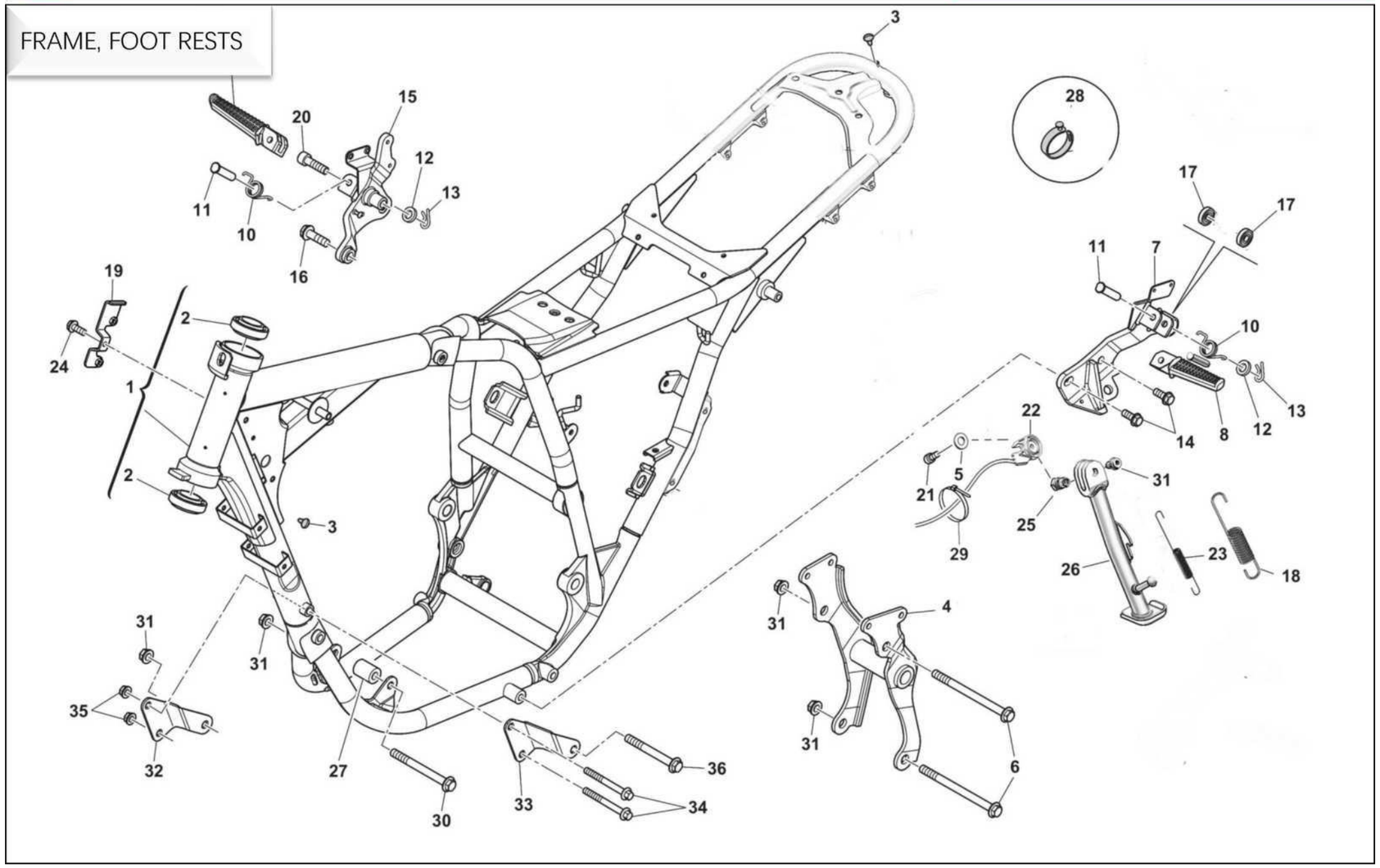
FRAME, FOOT RESTS
3
28
15
20
12
13
11
10
16
17
17
11
7
19
2
10
24
1
13
22
14
8
12
5
31
21
2
3
25
29
23
26
18
31
4
31
31
35
32
27
30
33
36
34
31
6

FRAME, FOOT RESTS

| Notes | No | Code No | NAME | Q-ty | |
|---|---|---|---|---|---|
| | 1 | 41011837 | FRAME WITH BEARINGS | 1 | |
| | 2 | 800087243 | TAPERED ROLLER BEARING | 2 | |
| | 3 | 10000348 | SCREW M6X16 | 3 | |
| | 4 | F000P03402 | ENGINE PLATE | 1 | |
| | 5 | Z00056377 | WASHER | 1 | |
| | 6 | 8U0069138 | SCREW M10x110 | 2 | |
| | 7 | 41130215 | L.H. FOOTREST SUPPORT | 1 | |
| | 8 | F000P00698 | L.H. FOOTREST | 1 | |
| | 9 | F000P00699 | R.H. FOOTREST | 1 | |
| | 10 | F000P00822 | SPRING | 2 | |
| | 11 | F000P00823 | PIN | 2 | |
| | 12 | Z00056377 | WASHER | 2 | |
| | 13 | 64ND20068 | SPLIT PIN | 2 | |
| | 14 | ZG0062797 | FLANGED EXAGON HEAD SCREW M10x22 | 2 | |
| | 15 | 41120310 | R.H. FOOTREST SUPPORT | 1 | |
| | 16 | ZF0062797 | FLANGED EXAGON HEAD SCREW M10x30 | 1 | |
| | 17 | 70090215 | BEARING 6900 | 2 | |
| | 18 | 10000177 | EXTERNAL SIDE STAND SPRING | 1 | |
| | 19 | F000P03619 | CABLE GUIDE PLATE | 1 | |
| | 20 | YN0082751 | SCREW TCEIF M10x40 | 1 | |
| | 21 | FB00P03820 | SCREW TCEI M5x16 | 2 | |
| | 22 | 31120020 | POWEROFF SWITCH | 1 | |
| | 23 | 10000176 | INTERNAL SIDE STAND SPRING | | |
| | 24 | 10000346 | SCREW M6x10 | 1 | |
| | 25 | FA00P03798 | SIDE STAND SCREW | 1 | |
| | 26 | 10000224 | LATERAL STAND | 1 | |

FRAME, FOOT RESTS

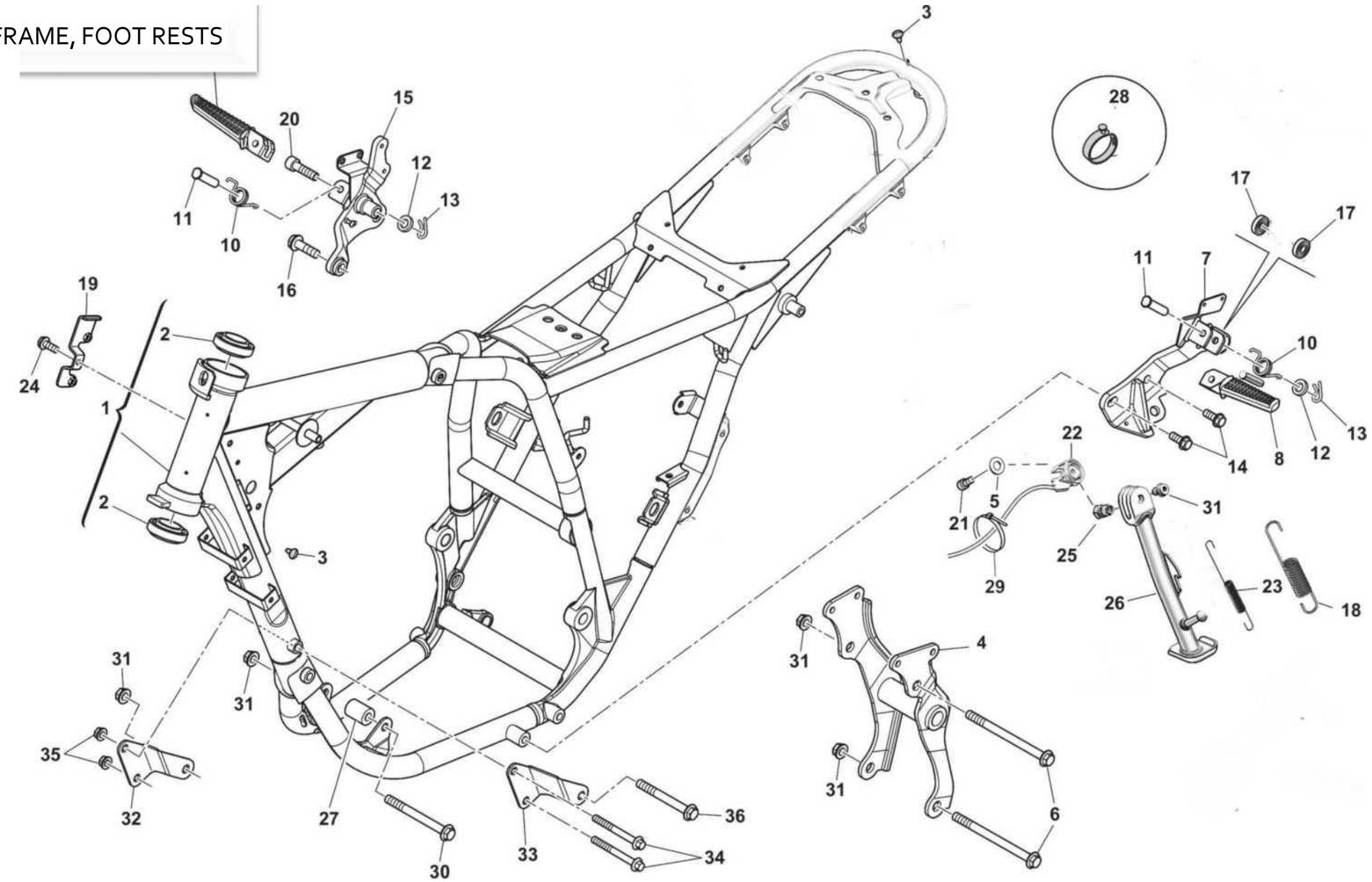

FRAME, FOOT RESTS

| Notes | No | Code No | NAME | Qty | |
|---|---|---|---|---|---|
| | 27 | FC00P01286 | SPACER | 1 | |
| | 28 | 800092247 | CLAMP | 2 | |
| | 29 | 800056444 | CLAMP L=188 mm | 3 | |
| | 30 | 10000535 | SCREW M10x125 | 1 | |
| | 31 | 72030820 | SIDE STAND SCREW | 1 | |
| | 32 | F000P03458 | R.H. FRONT ENGINE PLATE | 1 | |
| | 33 | F000P03459 | L.H. FRONT ENGINE PLATE | 1 | |
| | 34 | YZ0073458 | SCREW M8x1.25-L85 | 2 | |
| | 35 | Y00043928 | FLANGED NUT M8X1,25 | 2 | |
| | 36 | YW0069138 | FLANGED EXAGON HEAD SCREW M10x75 | 1 | |

PASSENGER FOOT RESTS

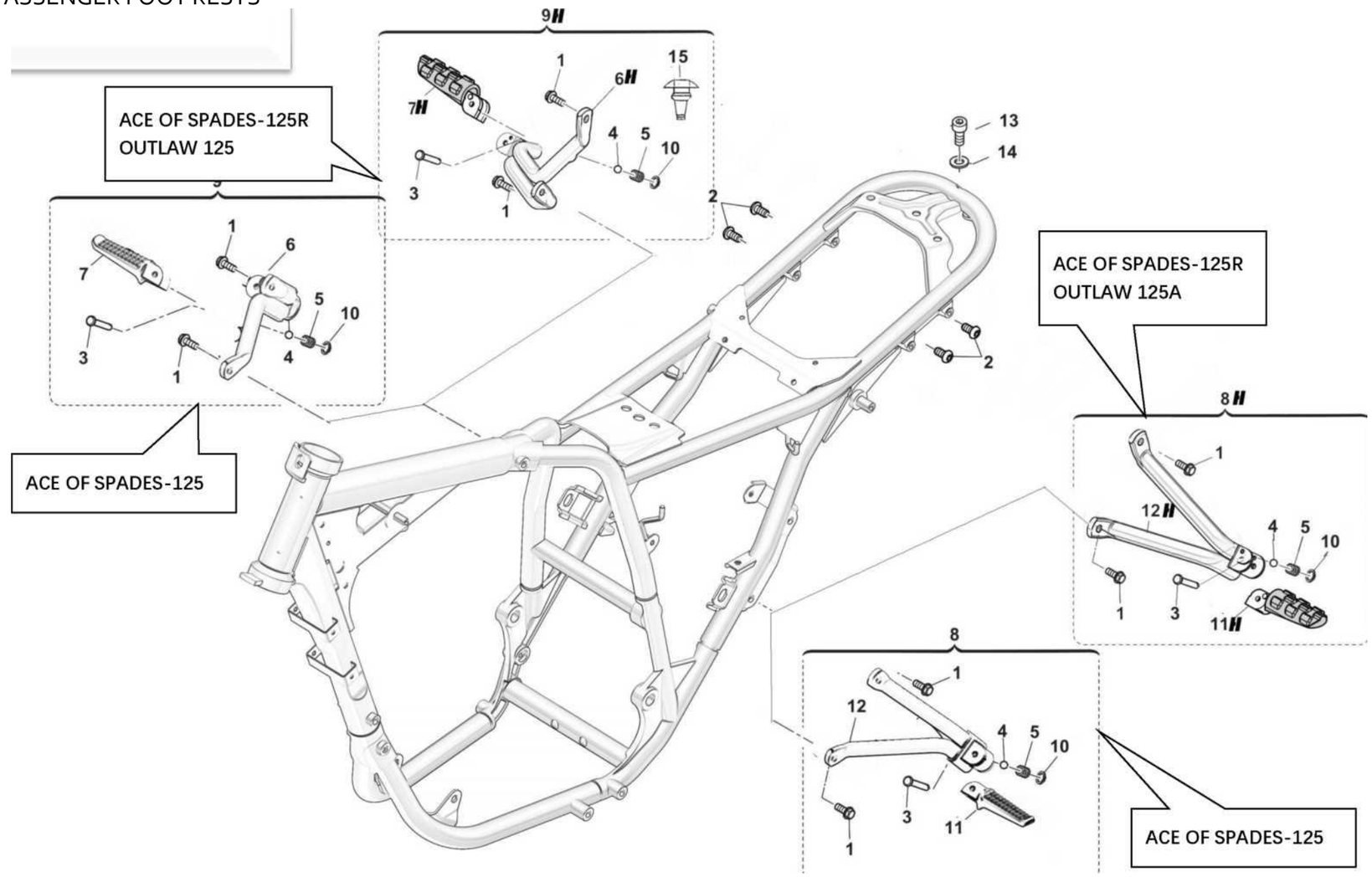

PASSENGER FOOT RESTS

| Notes | No | Code No | NAME | Qty | |
|---|---|---|---|---|---|
| | 1 | 10000356 | FLANGED EXAGON HEAD SCREW | 4 | |
| | 2 | 10000393 | MREW M8x16 | 4 | |
| | 3 | ZB0053546 | PIN-06x33.5mm | 2 | |
| | 4 | 6BN021507 | BALL-D1/4 | 2 | |
| | 5 | 800062655 | SPRING-D6-L18 | 2 | |
| **ACE OF SPADES 125** | 6 | 10000562 | R.H. FOOTREST SUPPORT | 1 | |
| **OUTLAW 125 ACE OF SPADES 125R** | 6H | F000P02173 | R.H. FOOTREST SUPPORT | 1 | |
| **ACE OF SPADES 125** | 7 | 10000563 | PASSENGER R.H. FOOTREST | 1 | |
| **OUTLAW 125 ACE OF SPADES 125R** | 7H | 8A0085928 | PASSENGER R.H. FOOTREST | 1 | |
| **ACE OF SPADES 125** | 8 | 41150440 | PASSENGER L.H. FOOTREST ASSY | 1 | |
| **OUTLAW 125 ACE OF SPADES 125R** | 8H | F000A02170 | PASSENGER L.H. FOOTREST ASSY | 1 | |
| **ACE OF SPADES 125** | 9 | 41140453 | PASSENGER R.H. FOOTREST ASSY | 1 | |
| **OUTLAW 125 ACE OF SPADES 125R** | 9H | F000A02171 | PASSENGER R.H. FOOTREST ASSY | 1 | |
| | 10 | 66ND21308 | CIRCLIP | 2 | |
| **ACE OF SPADES 125** | 11 | 10000565 | PASSENGER L.H. FOOTREST | 1 | |
| **OUTLAW 125 ACE OF SPADES 125R** | 11H | 8A0085929 | PASSENGER L.H. FOOTREST | 1 | |
| **ACE OF SPADES 125** | 12 | 10000564 | L.H. FOOTREST SUPPORT | 1 | |
| **OUTLAW 125 ACE OF SPADES 125R** | 12H | F000P02172 | L.H. FOOTREST SUPPORT | 1 | |
| | 13 | 10000317 | SCREW M8X20 | 1 | |
| | 14 | 72040236 | WASHER 8 | 1 | |
| | | | | | |

HANDLEBAR AND CONTROLS

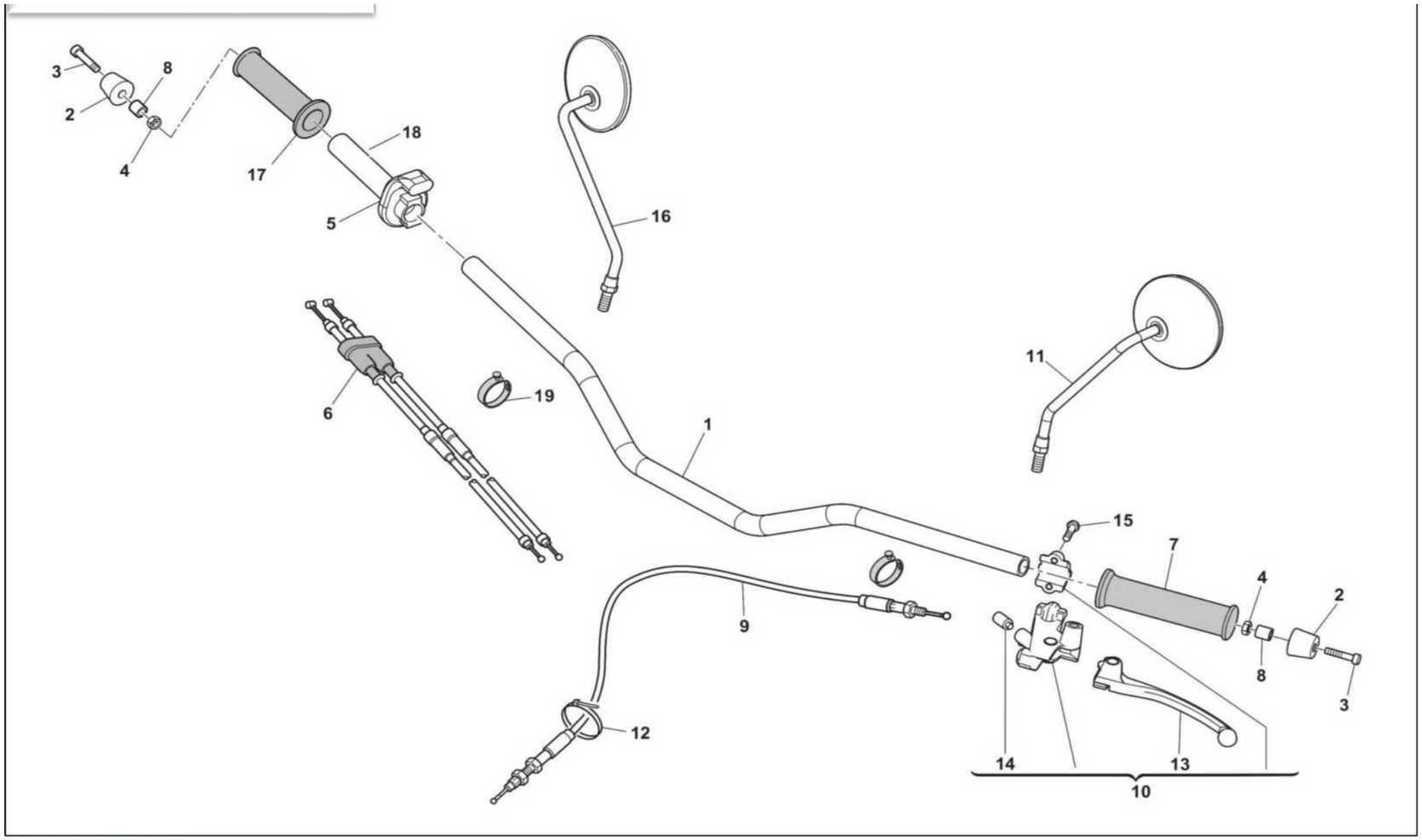

HANDLEBAR AND CONTROLS

| Notes | No | Code No | NAME | Qty | |
|---|---|---|---|---|---|
| | 1 | F0A0P01543 | HANDLEBAR | 1 | |
| | 2 | F000P03133 | COUNTERBALANCE | 2 | |
| | 3 | 60ND02519 | BOLT TEI M6x1 | 2 | |
| | 4 | 61ND15062 | SELF-LOCKING NUT M6x1 | 2 | |
| | 5 | F000A0165 | COMPLETE THROTTLE CONTROL | 1 | |
| | 6 | 8000H2115 | CABLE ASSY, THROTTLE | 1 | |
| | 7 | F000P03135 | HANDGRIPS | 1 | |
| | 8 | F000P03586 | TUBESPACER | 2 | |
| | 9 | F000P03719 | CLUTCH CABLE | 1 | |
| | 10 | F000A03853 | CLUTCH CONTROL ASSY | 1 | |
| | 11 | FA00P02286 | L.H. REAR-VIEW MIRROR | 1 | |
| | 12 | 73010695 | CLAMP | 2 | |
| | 13 | F000P03856 | CLUTCH LEVER | 1 | |
| | 14 | 45530027 | CLUTCH LEVER SWITCH | 1 | |
| | 15 | 10000350 | FLANGED EXAGON HEAD SCREW M6x20 | 2 | |
| | 16 | F000P02286 | R.H. REAR-VIEW MIRROR | 1 | |
| | 17 | F000P03136 | HANDGRIPS | 1 | |
| | 18 | F000P01640 | TUBESPACER | 1 | |
| | 19 | 800092668 | RUBBER BELT | 2 | |
| | | | | | |
| | | | | | |
| | | | | | |
| | | | | | |
| | | | | | |
| | | | | | |
| | | | | | |

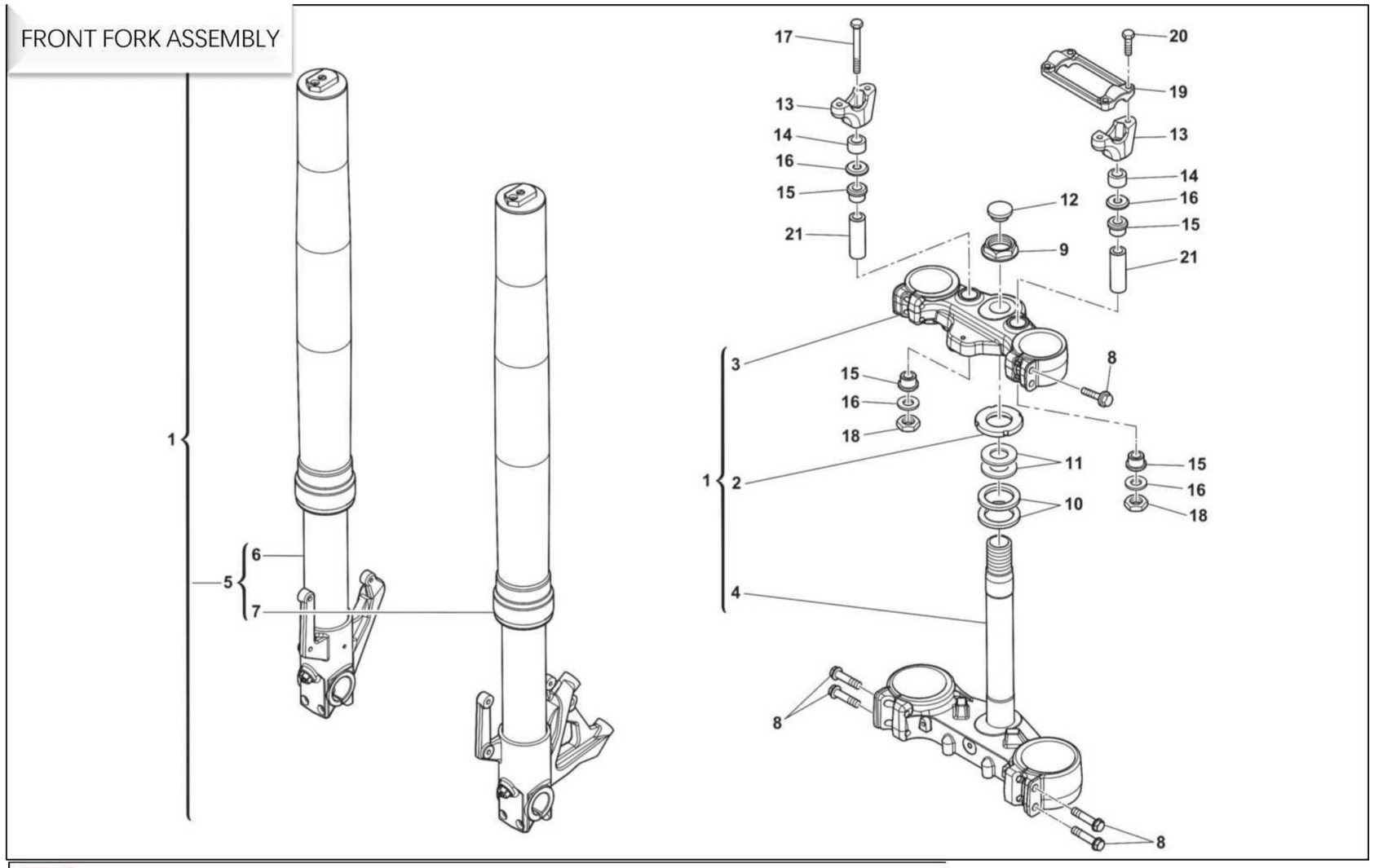


**ACE OF SPADES 125** **ACE OF SPADES 125R** **OUTLAW 125**

FRONT FORK ASSEMBLY

| Notes | No | Code No | NAME | Q-ty | |
|---|---|---|---|---|---|
| | 1 | F000A03498 | FRONT SUSPENSION ASSY | 1 | |
| | 2 | 8A0087717 | RING NUT | 1 | |
| | 3 | F000P03495 | STEERING HEAD | 1 | |
| | 4 | F000A03496 | BOTTOM YOKE WITH PIN | 1 | |
| | 5 | F000A03498 | FORK LEGS ASSY | 1 | |
| | 6 | F000A03632 | COMPLETE R.H. SHOCK ABSORBER | 1 | |
| | 7 | F000A03633 | COMPLETE L.H. SHOCK ABSORBER | 1 | |
| | 8 | 10000502 | FLANGED EXAGON HEAD SCREW M8x40 | 8 | |
| | 9 | 8A0069315 | NUT M26 | 1 | |
| | 10 | 800087736 | WASHER | 2 | |
| | 11 | 800087745 | GASKET | 2 | |
| | 12 | F000P00912 | PLUG | 1 | |
| | 13 | 80A0H2355 | LOWER CLAMP | 2 | |
| | 14 | 8A00A6683 | SPACER | 2 | |
| | 15 | 800060233 | SILENTBLOCK | 4 | |
| | 16 | 800060234 | WASHER | 4 | |
| | 17 | 60ND01222 | FLANGED EXAGON HEAD SCREW M10x80 | 2 | |
| | 18 | 10000396 | SELF-LOCKING NUT M10x1,5 | 2 | |
| | 19 | 80A0B0522 | UPPER CLAMP | 1 | |
| | 20 | 10000363 | SCREW M8x30 | 4 | |
| | | | | | |
| | | | | | |
| | | | | | |
| | | | | | |
| | | | | | |
| | | | | | |

LEFT FORK

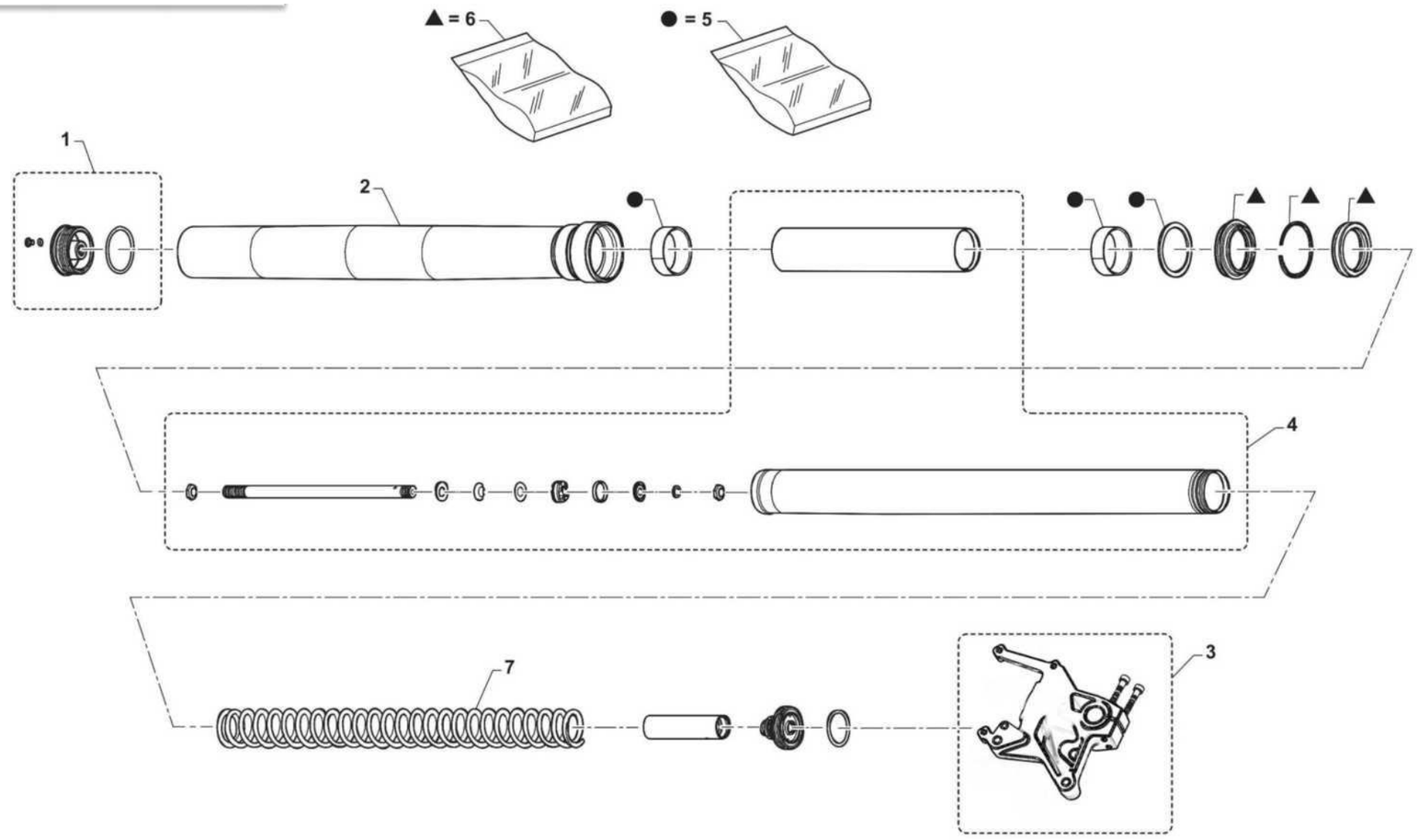

LEFT FORK

| Notes | No | Code No | NAME | Qty | |
|---|---|---|---|---|---|
| | 1 | F000P03634 | PLUG ASSY | 1 | |
| | 2 | F000P03638 | SLEEVE | 1 | |
| | 3 | F000P03637 | L.H. WHEEL FASTENING ASSY | 1 | |
| | 4 | F000P03639 | L.H. INNER STRUCTURE | 1 | |
| | 5 | F000P03640 | BUSHING KIT | 1 | |
| | 6 | F000P03641 | GASKET KIT | 1 | |
| | 7 | F000P03642 | SPRING | 1 | |

RIGHT FORK

▲ = 6

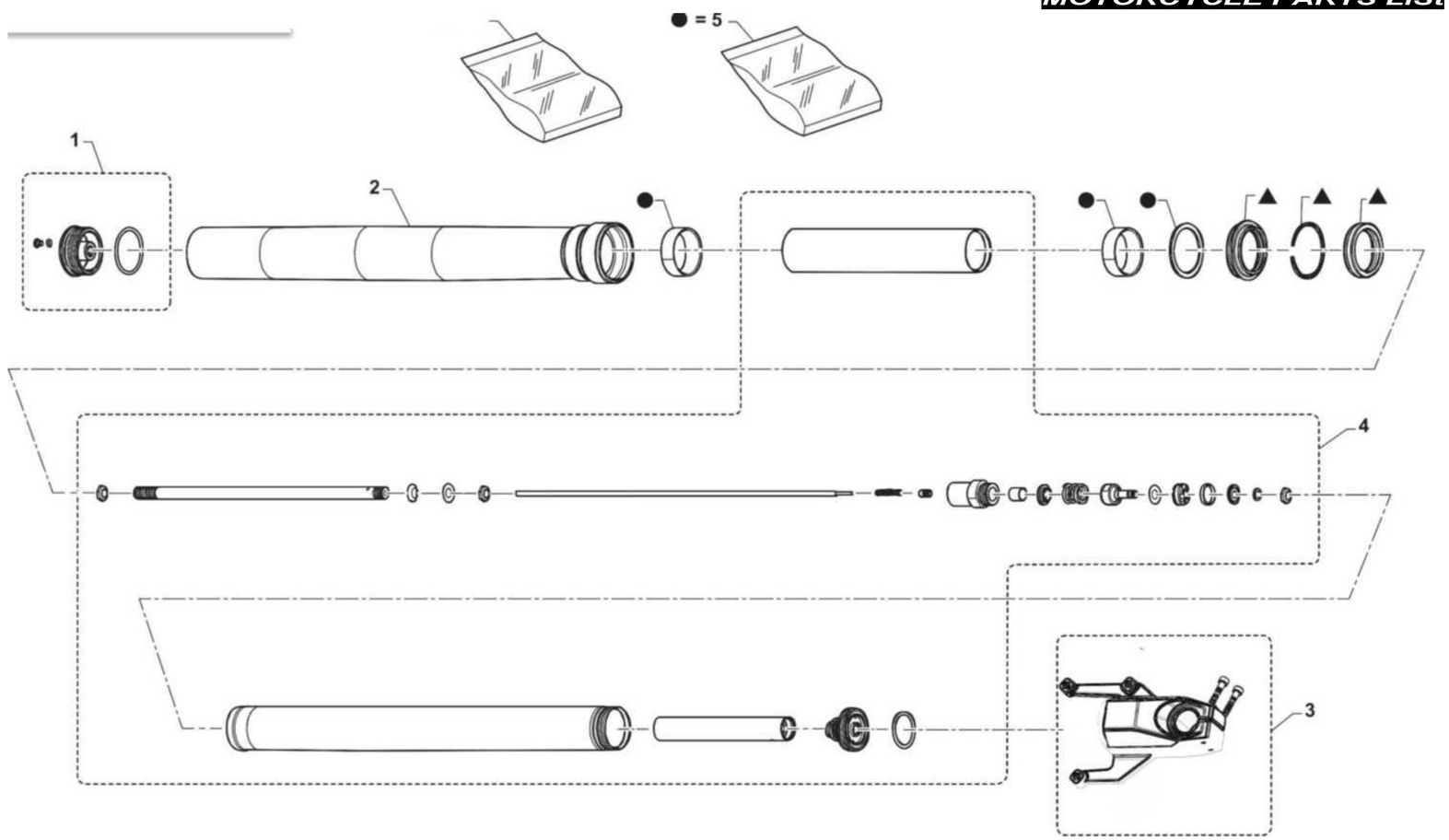

RIGHT FORK

| Notes | No | Code No | NAME | Qty | |
|---|---|---|---|---|---|
| | 1 | F000P03634 | PLUG ASSY | 1 | |
| | 2 | F000P03638 | SLEEVE | 1 | |
| | 3 | F000P03636 | R.H.. WHEEL FASTENING ASSY | 1 | |
| | 4 | F000P03635 | R.H.. INNER STRUCTURE | 1 | |
| | 5 | F000P03640 | BUSHING KIT | 1 | |
| | 6 | F000P03641 | GASKET KIT | 1 | |

REAR SWING ARM AND SUSPENSION

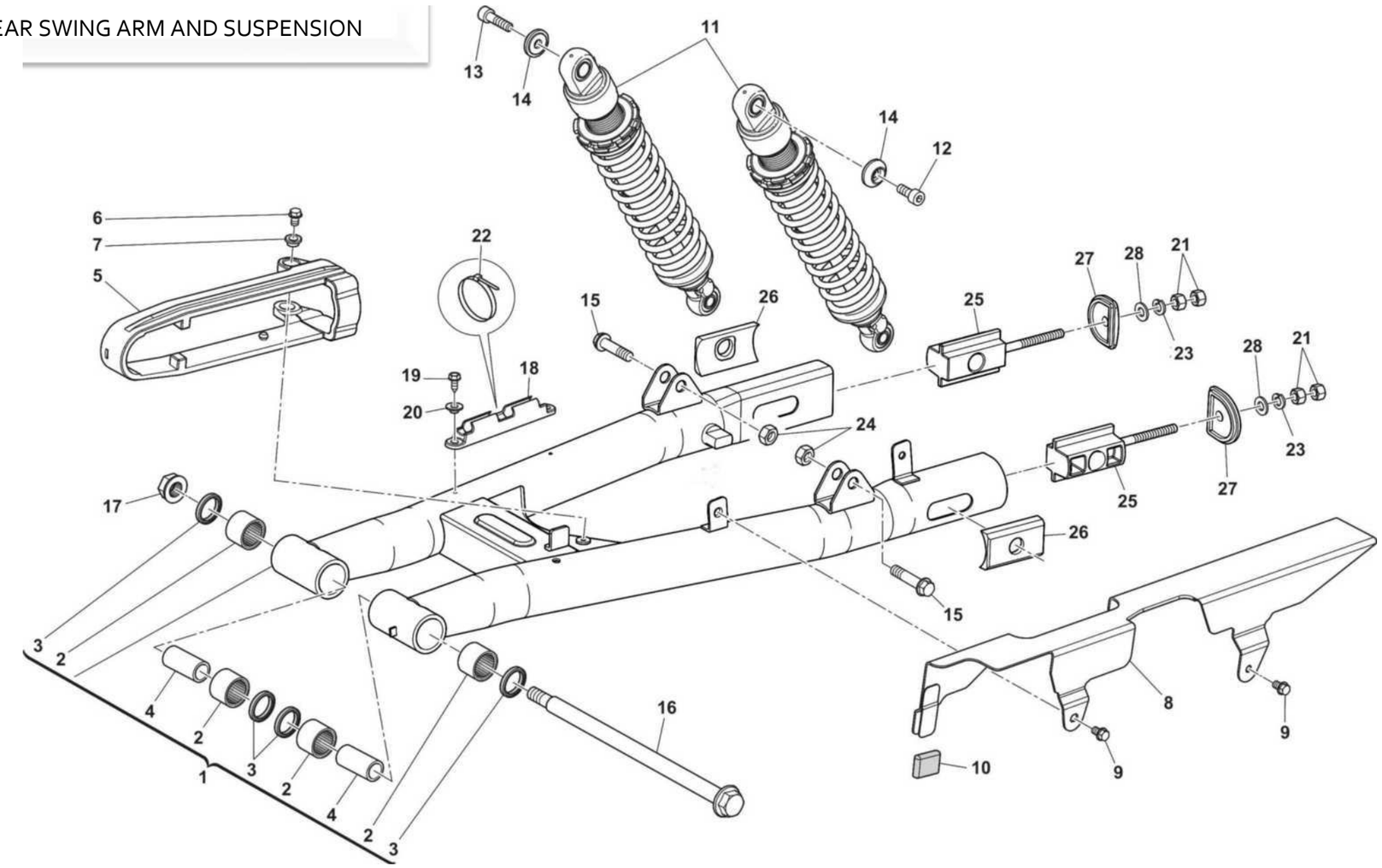

REAR SWING ARM AND SUSPENSION

| Notes | No | Code No | NAME | Qty | |
|---|---|---|---|---|---|
| | 1 | F000A02468 | COMPLETE SWINGING ARM | 1 | |
| | 2 | 41280414 | BEARING 6903 | 4 | |
| | 3 | 72110236 | GASKET FB 30x22x7 | 4 | |
| | 4 | 70280011 | FORK BUSHING | 2 | |
| | 5 | F000P02380 | CHAIN SLIDER | 1 | |
| | 6 | 72012225 | SCREW TC M6x12 | 2 | |
| | 7 | 70120280 | FLANGED BUSHING | 2 | |
| | 8 | F000P03648 | CHAIN GUARD | 1 | |
| | 9 | 10000346 | FLANGED EXAGON HEAD SCREW M6x10 | 2 | |
| | 10 | 73012153 | RUBBER FOR CHAIN COVER | 1 | |
| | 11 | F000P04329 | REAR SHOCK ABSORBER | 2 | |
| | 12 | 60ND02555 | SCREW TCEI M8x20 | 1 | |
| **ACE OF SPADES 125** | 13 | 60ND02555 | SCREW TCEI M8x20 | 1 | |
| **OUTLAW 125 ACE OF SPADES 125R** | 13H | 60ND02557 | SCREW TCEI M8x30 | | |
| | 14 | F000P00760 | CONIC SPACER | 2 | |
| | 15 | 10000345 | FLANGED EXAGON HEAD SCREW M10x40 | 2 | |
| | 16 | 70030169 | SWINGING ARM PIN | 1 | |
| | 17 | 72020488 | NUT M14x1,5 | 1 | |
| | 18 | 8000B1166 | HOSE RING | 1 | |
| | 19 | 10000355 | FLANGED EXAGON HEAD SCREW M5x12 | 2 | |
| | 20 | 800069282 | BUSHING D14-D7-D5,25 | 2 | |
| | 21 | 61ND15035 | NUT M8x1,25 | 4 | |
| | 22 | 73010695 | CLAMP | 2 | |
| | 23 | 62ND15538 | SPRING WASHER | 2 | |
| | 24 | 10000340 | FLANGED NUT M10x1,25 | 2 | |

REAR SWING ARM AND SUSPENSION

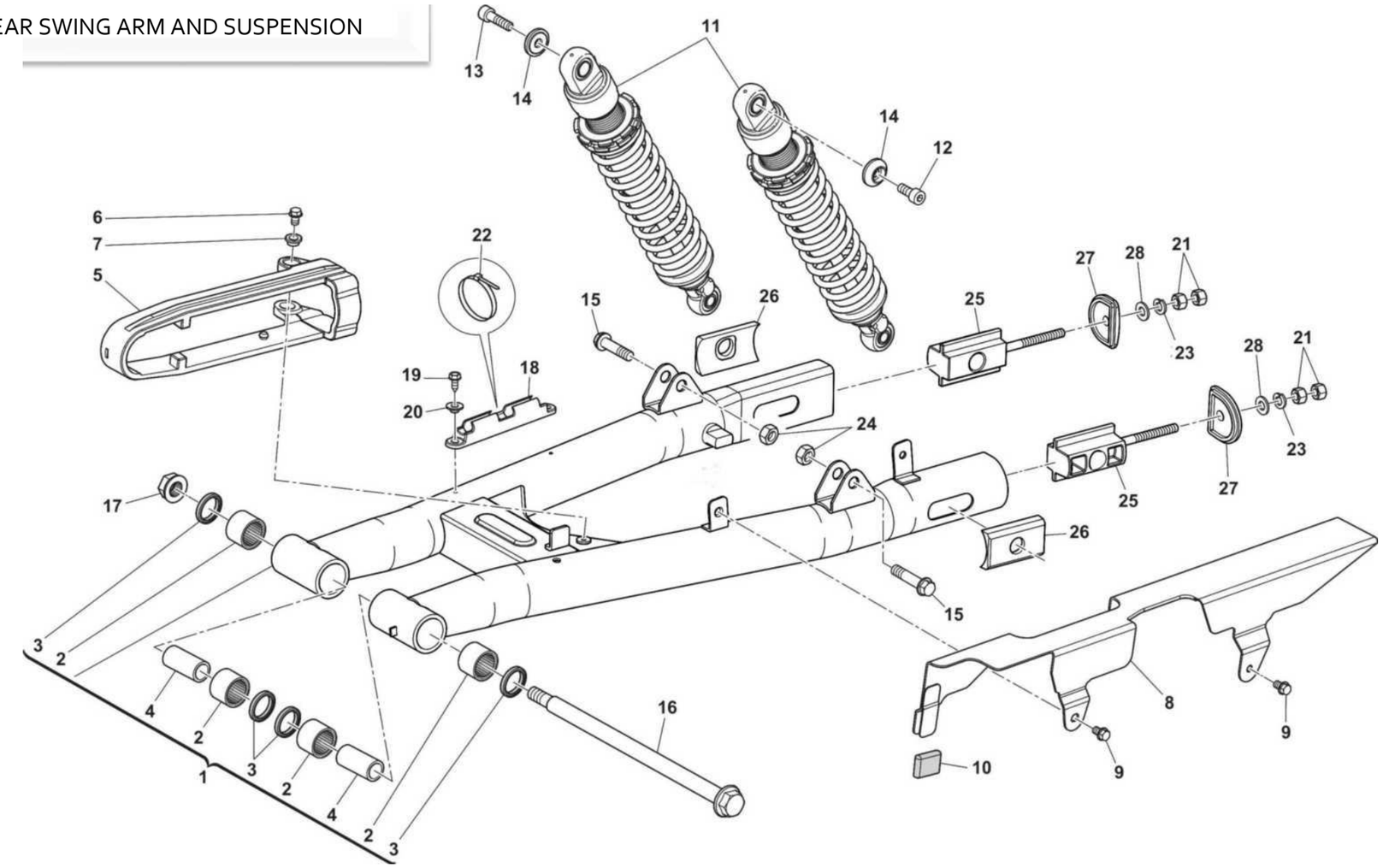

REAR SWING ARM AND SUSPENSION

| Notes | No | Code No | NAME | Qty | |
|---|---|---|---|---|---|
| | 25 | F000P02216 | CHAIN TENSIONER | 2 | |
| | 26 | F000P02217 | PLATE | 2 | |
| | 27 | F000P02218 | END PIPE | 2 | |
| | 28 | 62ND15506 | WASHER | 2 | |

FRONT WHEEL WITHOUT TYRE

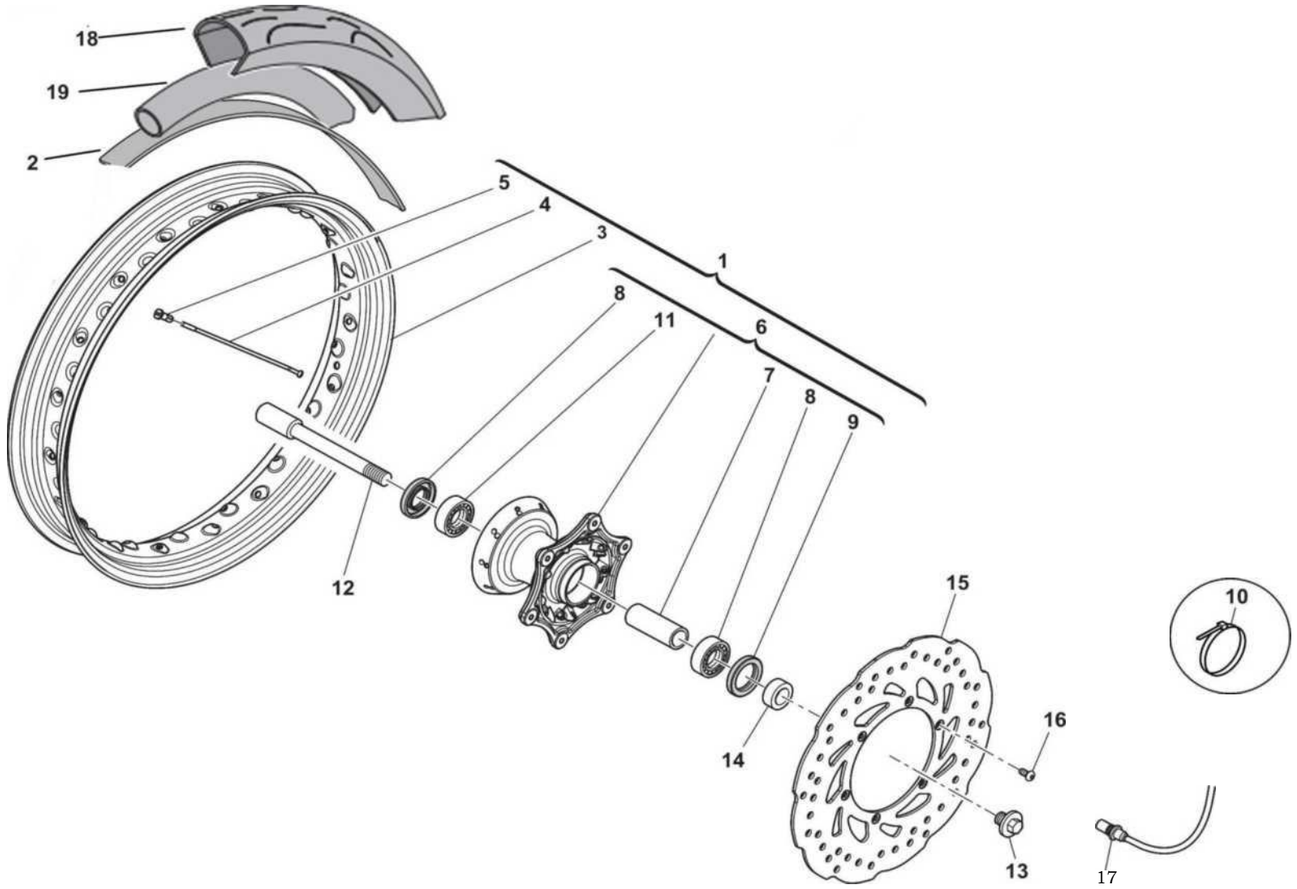

FRONT WHEEL WITHOUT TYRE

| Notes | No | Code No | NAME | Qty | |
|---|---|---|---|---|---|
| | 1 | F000A03627 | FRONT WHEEL WITHOUT TYRE | 1 | |
| | 2 | 54090026 | AIR TUBE PROTECTION | 1 | |
| | 3 | F000P03867 | FRONT WHEEL RIM 3,50”x17” | 1 | |
| | 4 | F000P03868 | SPOKE 3,5x170 | 18 | |
| | 4 | F000P03869 | SPOKE 3,5x168 | 18 | |
| | 5 | F000P03870 | NIPPLE | 36 | |
| | 6 | F000A03871 | FRONT WHEEL HUB | 1 | |
| | 7 | F000P03875 | INTERNALSPACER | 1 | |
| | 8 | F000P03873 | BALL BEARING | 2 | |
| | 9 | F000P02036 | SEAL RING 25x47x7 | 1 | |
| | 10 | 73010695 | CLAMP | 1 | |
| | 11 | F000P03874 | SEALING RING 32x47x7 | 1 | |
| | 12 | F000P01323 | WHEEL AXLE | 1 | |
| | 13 | F000P01324 | PLUG | 1 | |
| | 14 | F000P01322 | SPACER | 1 | |
| | 15 | F000P03415 | FRONT BRAKE DISC | 1 | |
| | 16 | ZB0061070 | SCREW M6x16 | 6 | |
| | 17 | E000P03631 | SPEED SENSOR | 1 | |
| | 18 | 10000541 | FRONT TIRE | 1 | |
| | 19 | 54070091 | FRONT TUBE | 1 | |
| | | | | | |
| | | | | | |
| | | | | | |
| | | | | | |
| | | | | | |
| | | | | | |

REAR WHEEL WITHOUT TYRE

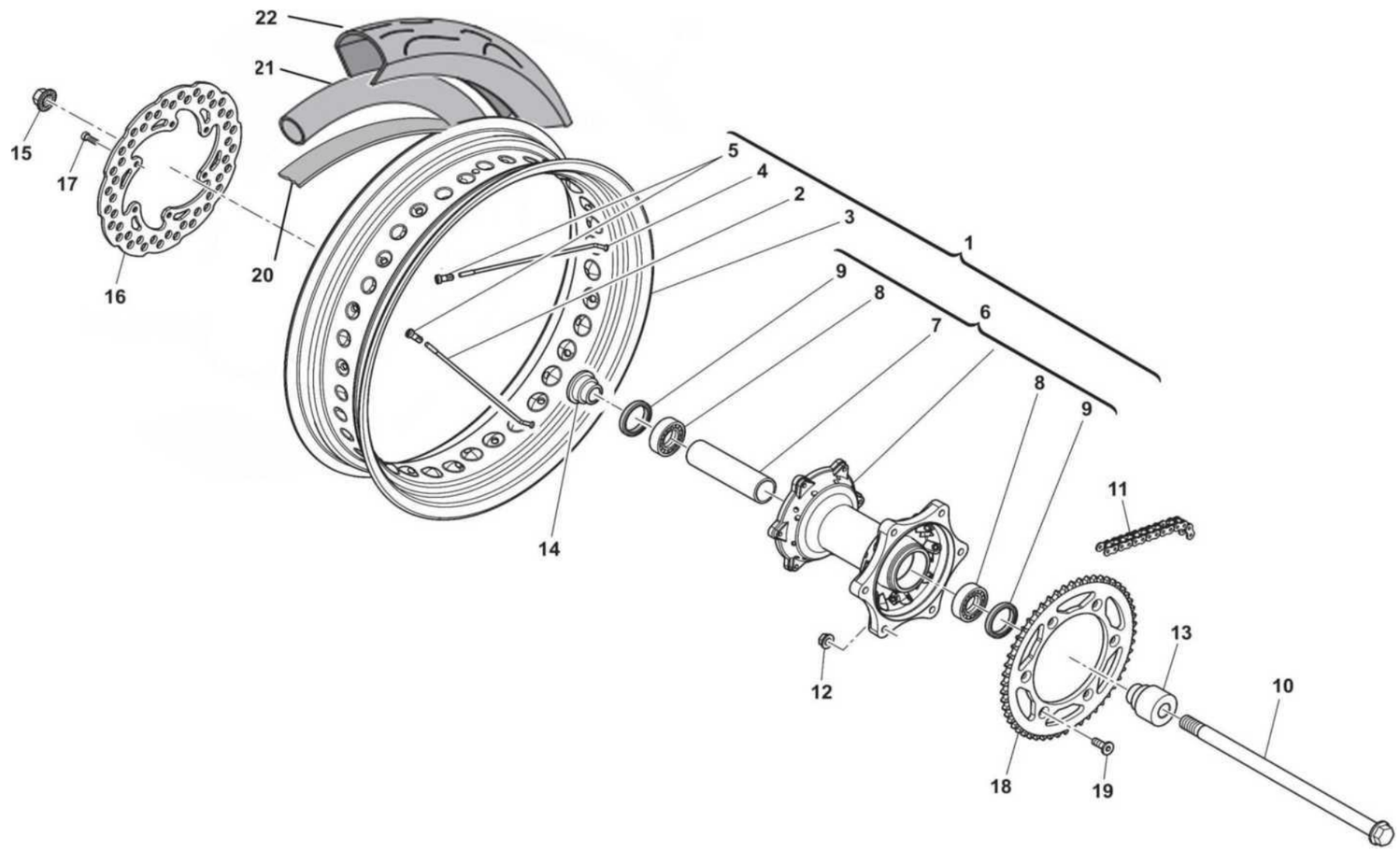

REAR WHEEL WITHOUT TYRE

| Notes | No | Code No | NAME | Q.ty | |
|---|---|---|---|---|---|
| | 1 | F000A03628 | REAR WHEEL WITHOUT TYRE | 1 | |
| | 2 | F000P03878 | SPOKE 4.0x184 | 18 | |
| | 3 | F000P03876 | REAR WHEEL RIM 4,25”x17” | 1 | |
| | 4 | F000P03877 | SPOKE 4.0x190 | 18 | |
| | 5 | F000P03879 | NIPPLE | 36 | |
| | 6 | F000A03880 | REAR WHEEL HUB ASSY | 1 | |
| | 7 | F000P03883 | SPACER 32x26x121.6 | 1 | |
| | 8 | F000P03882 | BEARING | 2 | |
| | 9 | F000P03874 | SEAL RING-032x047x7 | 1 | |
| | 10 | F000P02333 | REAR WHEEL AXLE | 1 | |
| | 11 | F000P03523 | CHAIN | 1 | |
| | 12 | Y00043928 | FLANGED NUT M8 | 6 | |
| | 13 | F000P03519 | LEFT SPACER | 1 | |
| | 14 | F000P03520 | RIGHT SPACER | 1 | |
| | 15 | 72020489 | NUT M16 | 1 | |
| | 16 | F000P01330 | REAR BRAKE DISC | 1 | |
| | 17 | ZB0061070 | SCREW M6x16 | 6 | |
| | 18 | F000P03522 | CHAIN SPROCKET T=54 | 1 | |
| | 1 9 | 8000H0158 | SPECIAL BOLT TSEI M8x28 | 6 | |
| | 20 | 54090026 | AIR TUBE PROTECTION | 1 | |
| | 21 | 54080104 | REAR TUBE | 1 | |
| | 22 | 10000542 | REAR TIRE | 1 | |
| | | | | | |
| | | | | | |
| | | | | | |
| | | | | | |

FRONT HYDRAULIC BRAKE



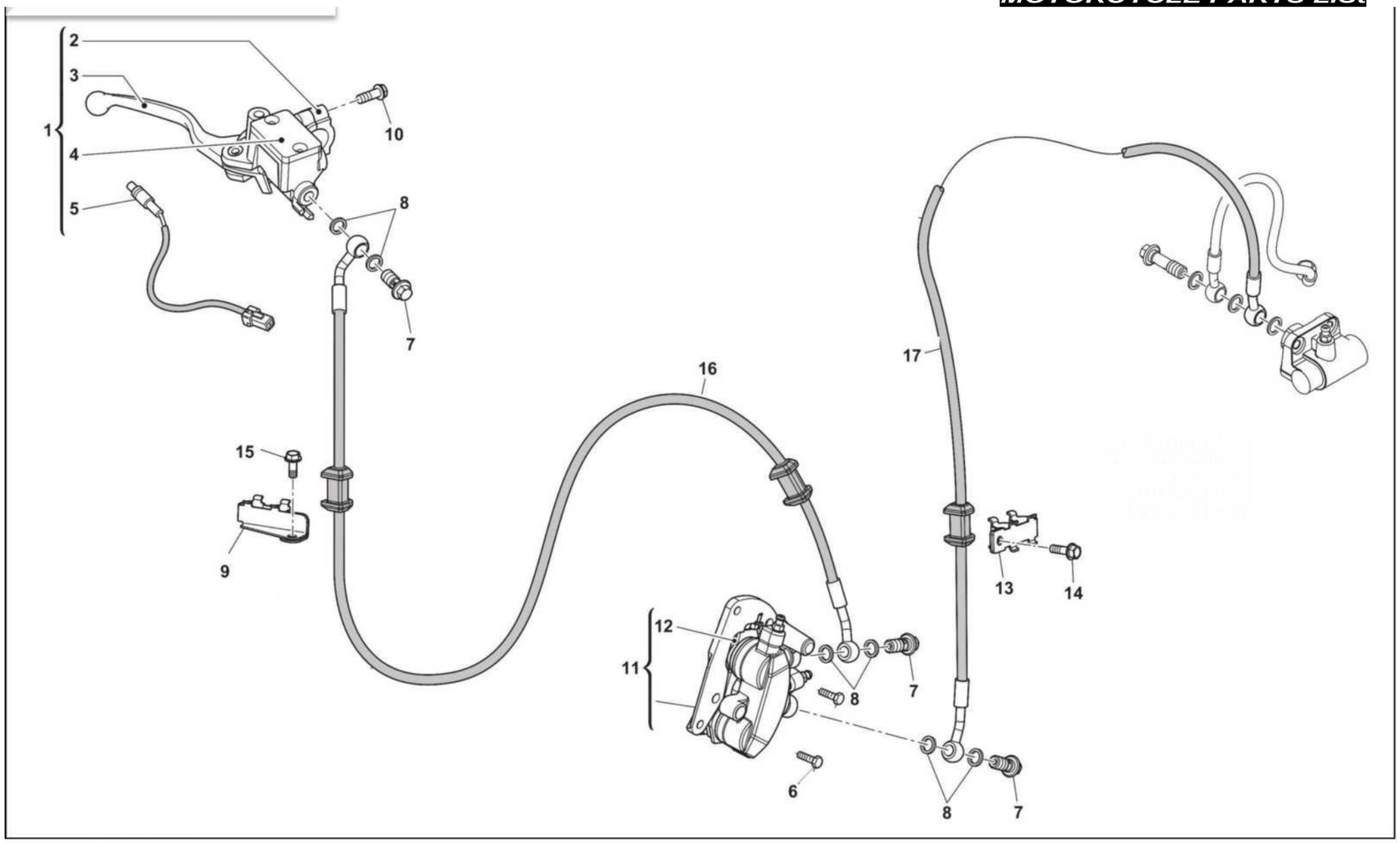

FRONT HYDRAULIC BRAKE

| Notes | No | Code No | NAME | Qty | |
|---|---|---|---|---|---|
| | 1 | F000A01289 | FRONT BRAKE CONTROL | 1 | |
| | 2 | F000P01617 | CONNECT CLIP | 1 | |
| | 3 | F000P01618 | FRONT BRAKE LEVER | 1 | |
| | 4 | F000P01619 | PLUG | 1 | |
| | 5 | F000P01620 | FRONT BRAKE PUMP SWITCH | 1 | |
| | 6 | 60ND02556 | SCREW M8x1.25-CH6-L25 | 2 | |
| | 7 | F000P02044 | HEXAGON SOCKET-HEAD BOLT M10x19 | 3 | |
| | 8 | 800021480 | WASHER | 6 | |
| | 9 | F000P03530 | PLATE | 1 | |
| | 10 | Z00062727 | FLANGED EXAGON HEAD SCREW M6x16 | 2 | |
| | 11 | F000A01621 | FRONT BRAKE CALLIPER | 1 | |
| | 12 | F000P02030 | PAIR OF BRAKE PADS | 1 | |
| | 13 | F000P03799 | PLATE | 1 | |
| | 14 | 10000347 | FLANGED EXAGON HEAD SCREW M6x14 | 1 | |
| | 15 | 10000355 | FLANGED EXAGON HEAD SCREW M5x12 | 1 | |
| | 16 | F000P03509 | BRAKE HOSE MASTER CYLINDER CBS | 1 | |
| | 17 | F000P03511 | BRAKE HOSE FRONT CALIPER CBS | 1 | |
| | | | | | |
| | | | | | |
| | | | | | |
| | | | | | |
| | | | | | |
| | | | | | |
| | | | | | |
| | | | | | |
| | | | | | |

REAR HYDRAULIC BRAKE

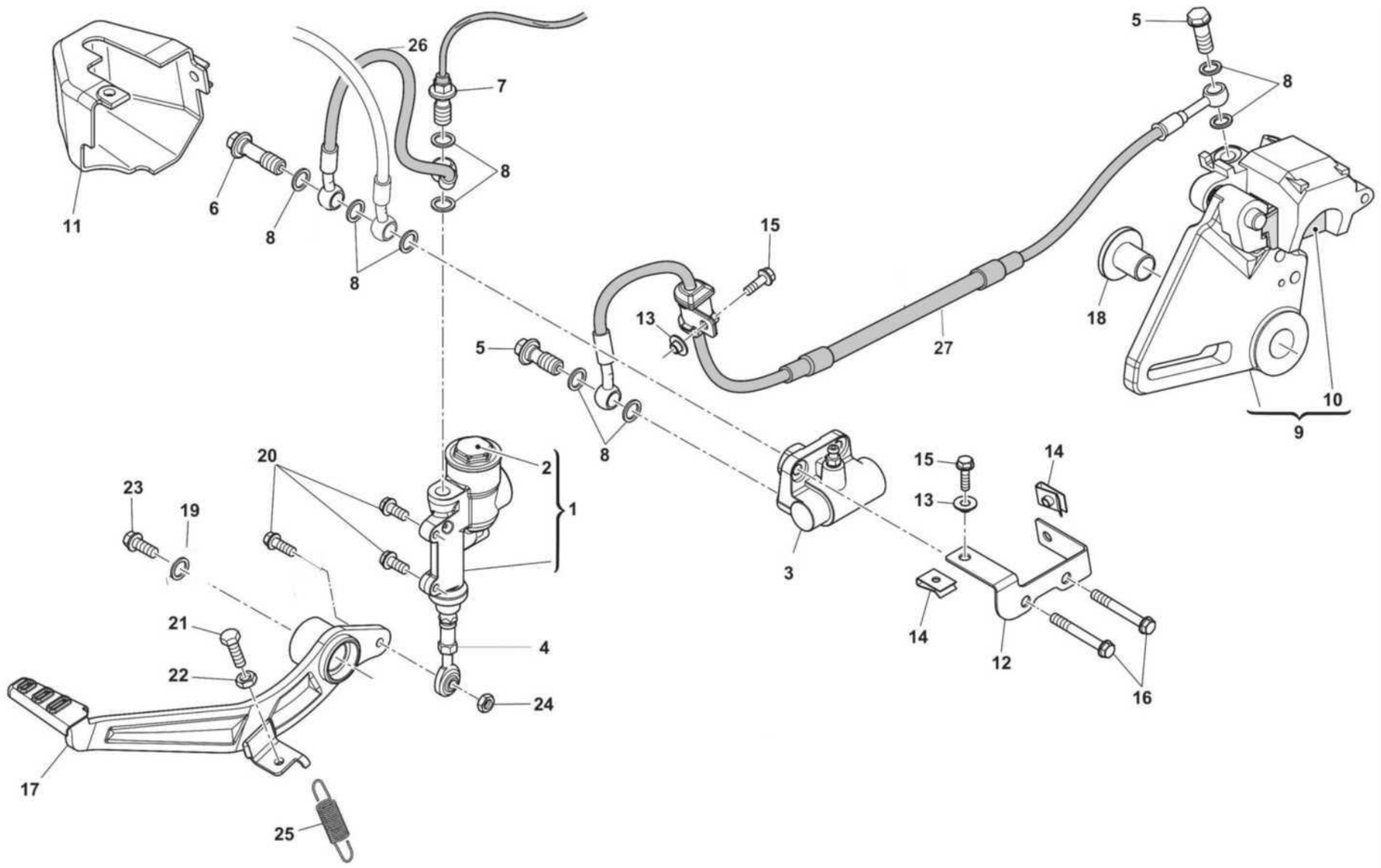

REAR HYDRAULIC BRAKE

| Notes | No | Code No | NAME | Qty | |
|---|---|---|---|---|---|
| | 1 | F000A01294 | REAR BRAKE PUMP | 1 | |
| | 2 | F000P02039 | REAR BRAKE TANK CAP | 1 | |
| | 3 | F000P01295 | DISTRIBUTION FRAME BRAKING | 1 | |
| | 4 | 55120292 | BALLJOINT | 1 | |
| | 5 | F000P02044 | HEXAGON SOCKET-HEAD BOLT M10x19 | 2 | |
| | 6 | F000P02043 | HEXAGON SOCKET-HEAD BOLT M10x28 | 1 | |
| | 7 | F000P02042 | REAR STOP SWITCH | 1 | |
| | 8 | 800021480 | WASHER | 9 | |
| | 9 | F000A03886 | REAR BRAKE CALLIPER | 1 | |
| | 10 | F000P02029 | PAIR OF BRAKE PADS | 1 | |
| | 11 | F000P01568 | PROTECTION | 1 | |
| | 12 | F000P01569 | PLATE | 1 | |
| | 13 | 800069282 | BUSHING 014x05,2504,8 | 2 | |
| | 14 | U00055134 | CLIP NUT | 2 | |
| | 15 | 10000361 | FLANGED EXAGON HEAD SCREW M5x16 | 2 | |
| | 16 | Z00062731 | FLANGED EXAGON HEAD SCREW M6x45 | 2 | |
| | 17 | F000A00513 | BRAKE CONTROL PEDAL | 1 | |
| | 18 | F000P03521 | SPACER | 1 | |
| | 19 | Z00045499 | FLANGED BUSHING | 1 | |
| | 20 | 10000349 | FLANGED EXAGON HEAD SCREW M6x20 | 3 | |
| | 21 | 60ND01081 | HEXAGON SOCKET-HEAD BOLT M6x25 | 1 | |
| | 22 | 61ND15033 | NUT M6 | 1 | |
| | 23 | 10000348 | FLANGED EXAGON HEAD SCREW M6x16 | 1 | |
| | 24 | Z00061313 | NUT M6 | 1 | |
| | 25 | 8000H5148 | RETURN SPRING | 1 | |
| | 26 | F000P03510 | BRAKE HOSE REAR PUMP CBS | 1 | |

REAR HYDRAULIC BRAKE

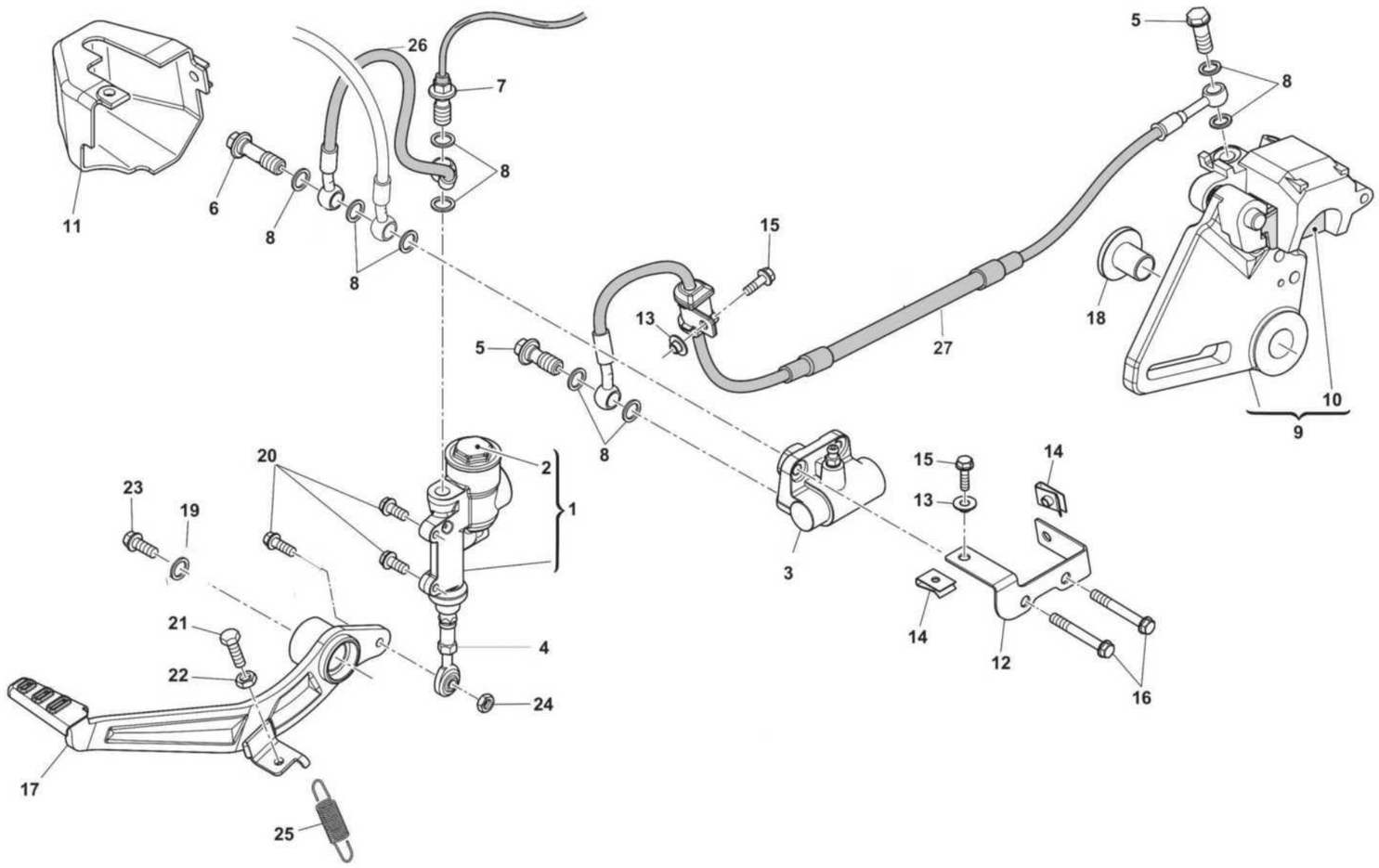

REAR HYDRAULIC BRAKE

| Notes | No | Code No | NAME | Qty | |
|---|---|---|---|---|---|
| | 27 | F000P03512 | BRAKE HOSE REAR CALIPER CBS | 1 | |

EXHAUST SYSTEM (ace of spades 125)

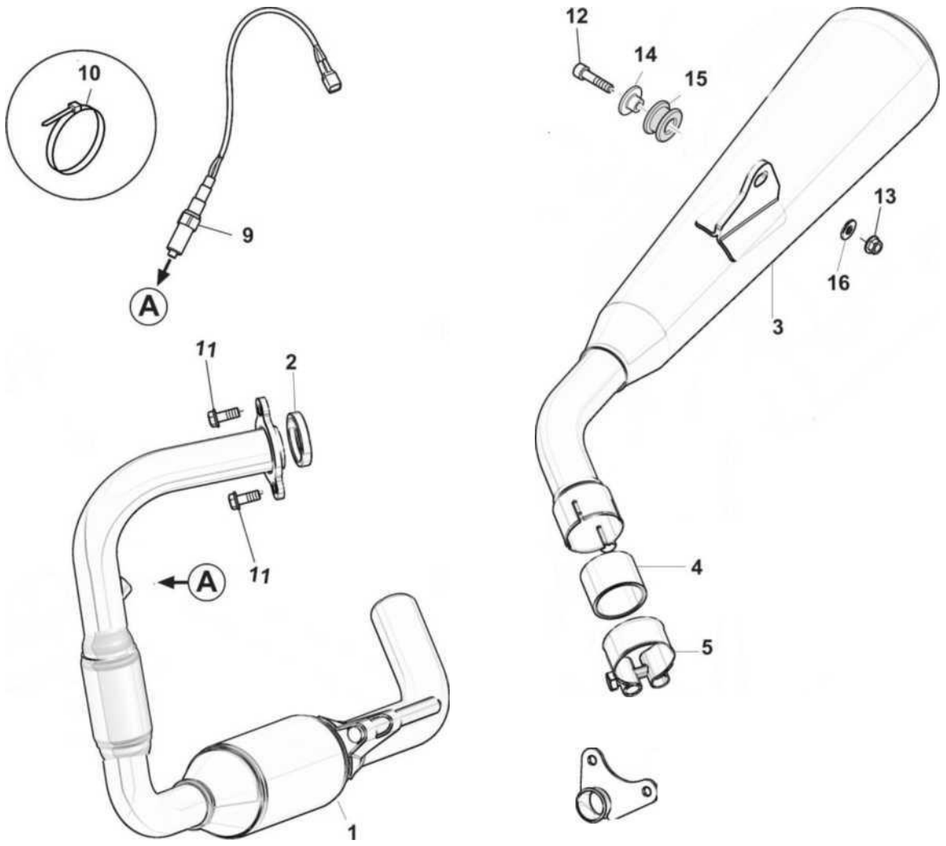

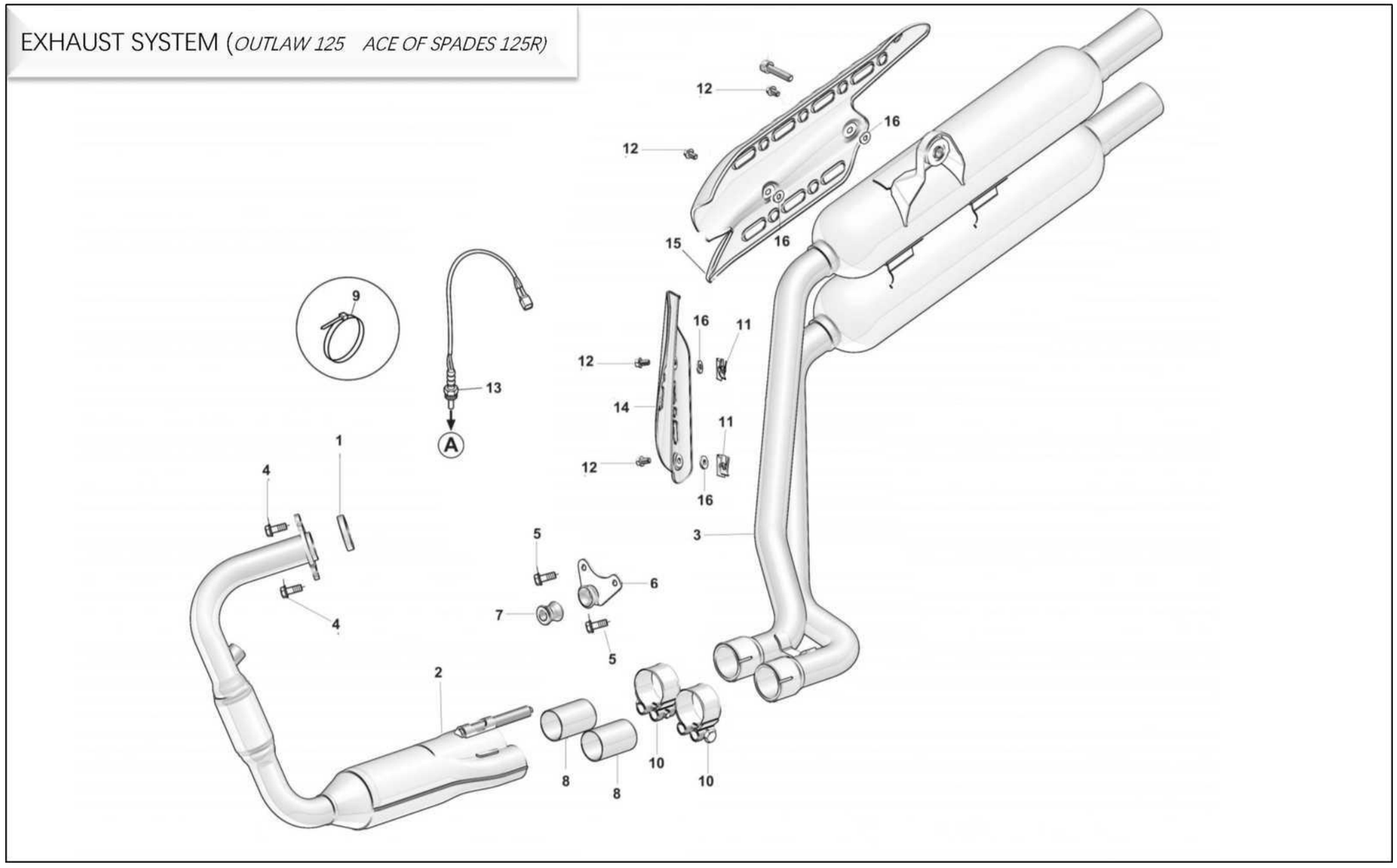
EXHAUST SYSTEM (OUTLAW 125 ACE OF SPADES 125R)
12
16
12
15
16
9
16
11
12
13
14
11
A
1
12
4
16
5
3
6
7
4
5
2
8
10
8
10

EXHAUST SYSTEM(ouzlw *125 aceofspades 125R)*

**OUTLA W125 ACE OF SPADES 125R**

| Notes | No | Code No | NAME | Qty | |
|---|---|---|---|---|---|
| | 1 | 10000540 | GASKET | 1 | |
| | 2 | F000A4845 | EXHAUST PIPE | 1 | |
| | 3 | F000A4846 | SILENCER | 1 | |
| | 4 | 10000352 | SCREW M8X1,25-25 | 2 | |
| | 5 | 10000347 | FLANGED EXAGON HEAD SCREW M6x14 | 2 | |
| | 6 | F000P03649 | EXHAUST SUPPORT | 1 | |
| | 7 | 800089302 | SILENT-BLOCK FOR EXHAUST | 1 | |
| | 8 | 8000H1864 | GASKET | 2 | |
| | 9 | 73010695 | CLAMP-188x4.8 | 2 | |
| | 10 | 8000H2219 | CLAMP | 2 | |
| | 11 | U00046893 | CLIP NUT M6 | 2 | |
| | 12 | 10000346 | FLANGED EXAGON HEAD SCREW M6x10 | 4 | |
| | 13 | 31350185 | LAMBDA SENSOR | 1 | |
| | 14 | F000P03323 | LOWER HEAT-PROTECTING | 1 | |
| | 15 | F000P00286 | HEAT-PROTECTING COVER | 1 | |
| | 16 | 800035112 | HEAT-PROTECTING WASHER | 4 | |
| | | | | | |
| | | | | | |
| | | | | | |
| | | | | | |
| | | | | | |
| | | | | | |
| | | | | | |
| | | | | | |



ITALY - 1971

## INSTRUMENT ASSY

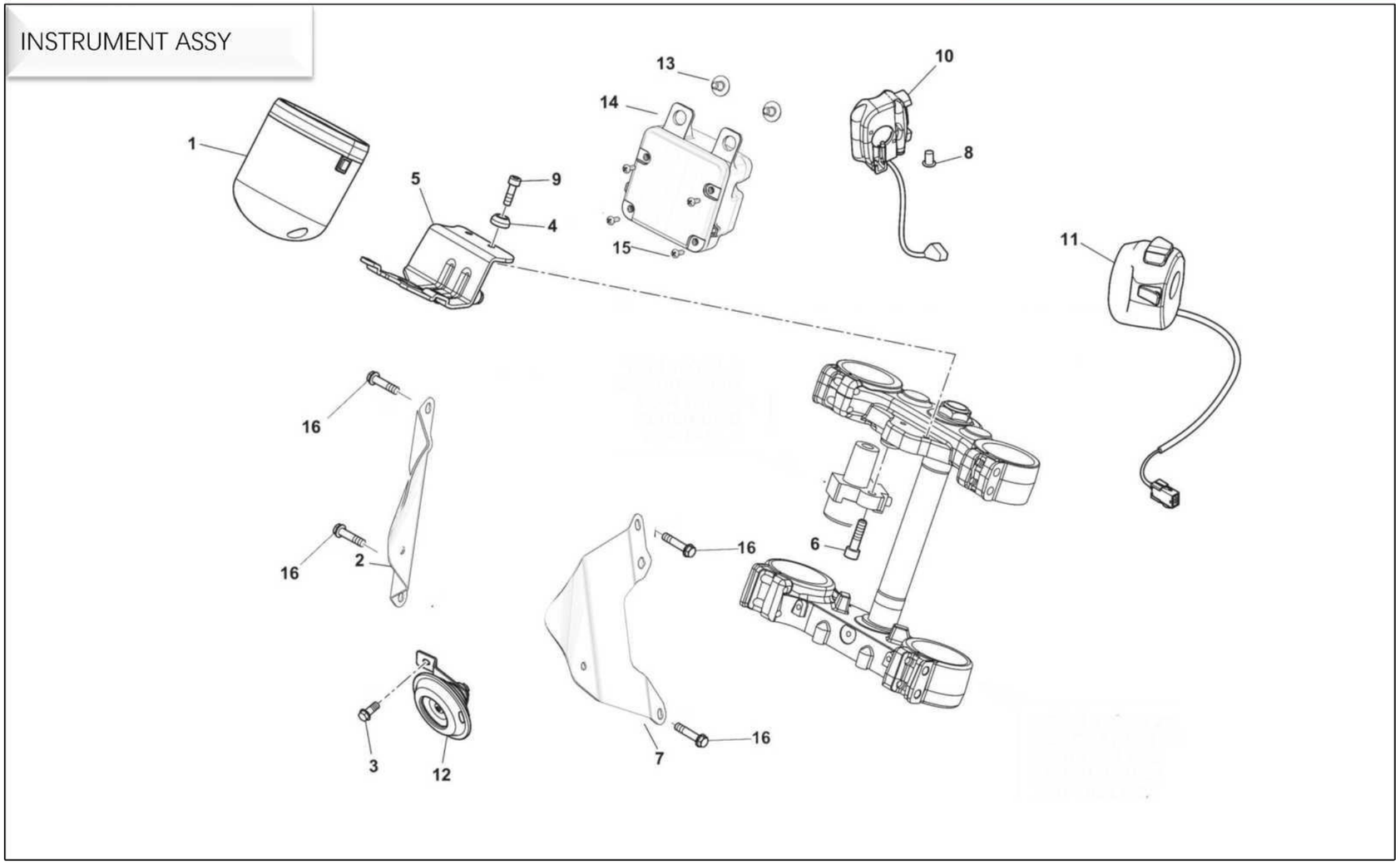

INSTRUMENT ASSY

| Notes | No | Code No | NAME | Qty | |
|---|---|---|---|---|---|
| | 1 | 37010630 | INSTRUMENT ASSY | 1 | |
| | 2 | 73210314 | RIGHT HEAD LIGHT FRAME | 1 | |
| | 3 | ZH0067545 | FLANGED EXAGON HEAD SCREW M6x12 | 1 | |
| | 4 | F000P00768 | CONIC SPACER | 2 | |
| | 5 | F000P03195 | BRACKET | 1 | |
| | 6 | 60ND02555 | SCREW TCEI M8x20 | 2 | |
| | 7 | 73210315 | LEFT HEAD LIGHT FRAME | 1 | |
| | 8 | 8000A1074 | RUBBER PIN | 2 | |
| | 9 | 72030453 | SCREW TCEI M6x16 | 2 | |
| | 10 | E000P03629 | RIGHT SWITCH | 1 | |
| | 11 | E000P03630 | LEFT HANDLE SWITCH | 1 | |
| | 12 | E000A03793 | HORN | 1 | |
| | 13 | Z0C055703 | SCREW M6X14 | 2 | |
| | 14 | F000A03597 | PLASTIC BOX ASSY | 1 | |
| | 15 | 72030341 | SCREW, TAPPING-D3.5-L13 | 4 | |
| | 16 | ZA0069056 | SCREW M8X45 | 4 | |
| | | | | | |
| | | | | | |
| | | | | | |
| | | | | | |
| | | | | | |
| | | | | | |
| | | | | | |
| | | | | | |
| | | | | | |
| | | | | | |

## MAIN WIRING HARNESS, ELECTRICAL PARTS

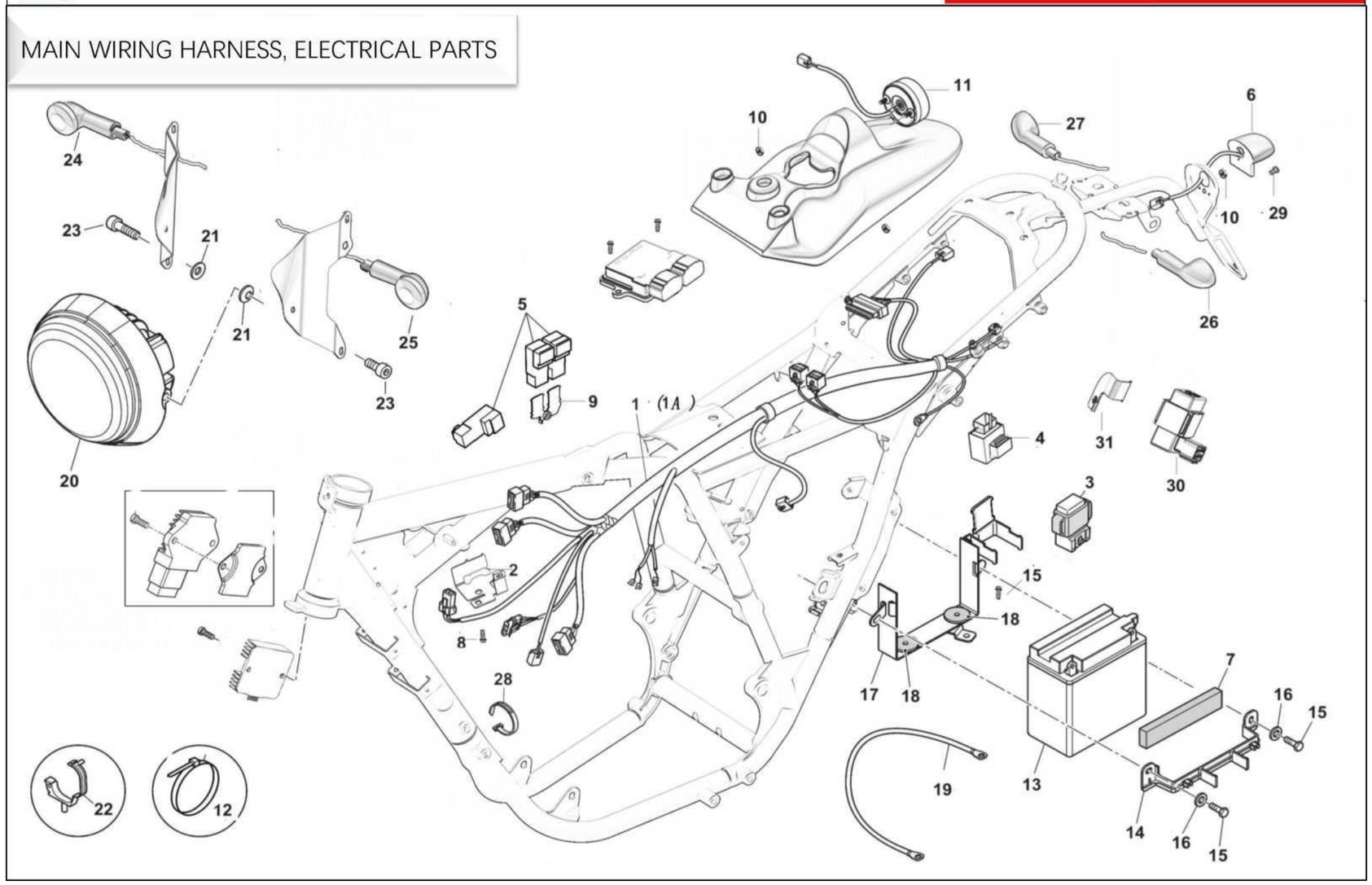

MAIN WIRING HARNESS, ELECTRICAL PARTS

| Notes | No | Code No | NAME | Qty | |
|---|---|---|---|---|---|
| | 1 | 10000239 | MAIN CABLE HARNESS | 1 | |
| **LXYPDJLO** | 1A | 31061630 | MAIN CABLE HARNESS | 1 | |
| | 2 | F000P03618 | RELAIS BRACKET ON THE FRAME | 1 | |
| | 3 | E000P02437 | SOLENOID STARTER | 1 | |
| | 4 | 31040039 | FLASH RELAY | 1 | |
| | 5 | 8000A6749 | RELAY FUEL PUMP | 3 | |
| | 6 | 32090077 | REAR REGISTRATION PLATE LAMP | 1 | |
| | 7 | F000P03850 | SPONGE | 1 | |
| | 8 | 10000346 | FLANGED EXAGON HEAD SCREW M6X10 | 1 | |
| | 9 | F000P03620 | RELAIS BRACKET ON THE AIRBOX | 1 | |
| | 10 | 72020549 | CAP NUT M6 | 3 | |
| | 11 | F000P02513 | TAIL LIGHT | 1 | |
| | 12 | 80A050005 | CLAMP | 1 | |
| | 13 | E000P03274 | BATTERY | 1 | |
| | 14 | E000P03275 | BRACKET | 1 | |
| | 15 | 10000347 | FLANGED EXAGON HEAD SCREW M6 x 14 | 3 | |
| | 16 | Z00021535 | WASHER | 3 | |
| | 17 | 73250190 | BATTERY SUPPORT | 1 | |
| | 18 | 73010197 | DAMPING MAT, BATTERY | 2 | |
| | 19 | E000P03516 | EARTH CABLE | 1 | |
| | 20 | EA00P02570 | COMPLETE FRONT HEADLAMP | 1 | |
| | 21 | F000P00760 | CONIC SPACER | 2 | |
| | 22 | 73011954 | CLAMP | 1 | |
| | 23 | 10000317 | SCREW M8X20 | 1 | |
| | 24 | E000P02314 | RH FRONT INDICATOR | 1 | |
| | 25 | E000P02315 | LH FRONT INDICATOR | 1 | |

## MAIN WIRING HARNESS, ELECTRICAL PARTS

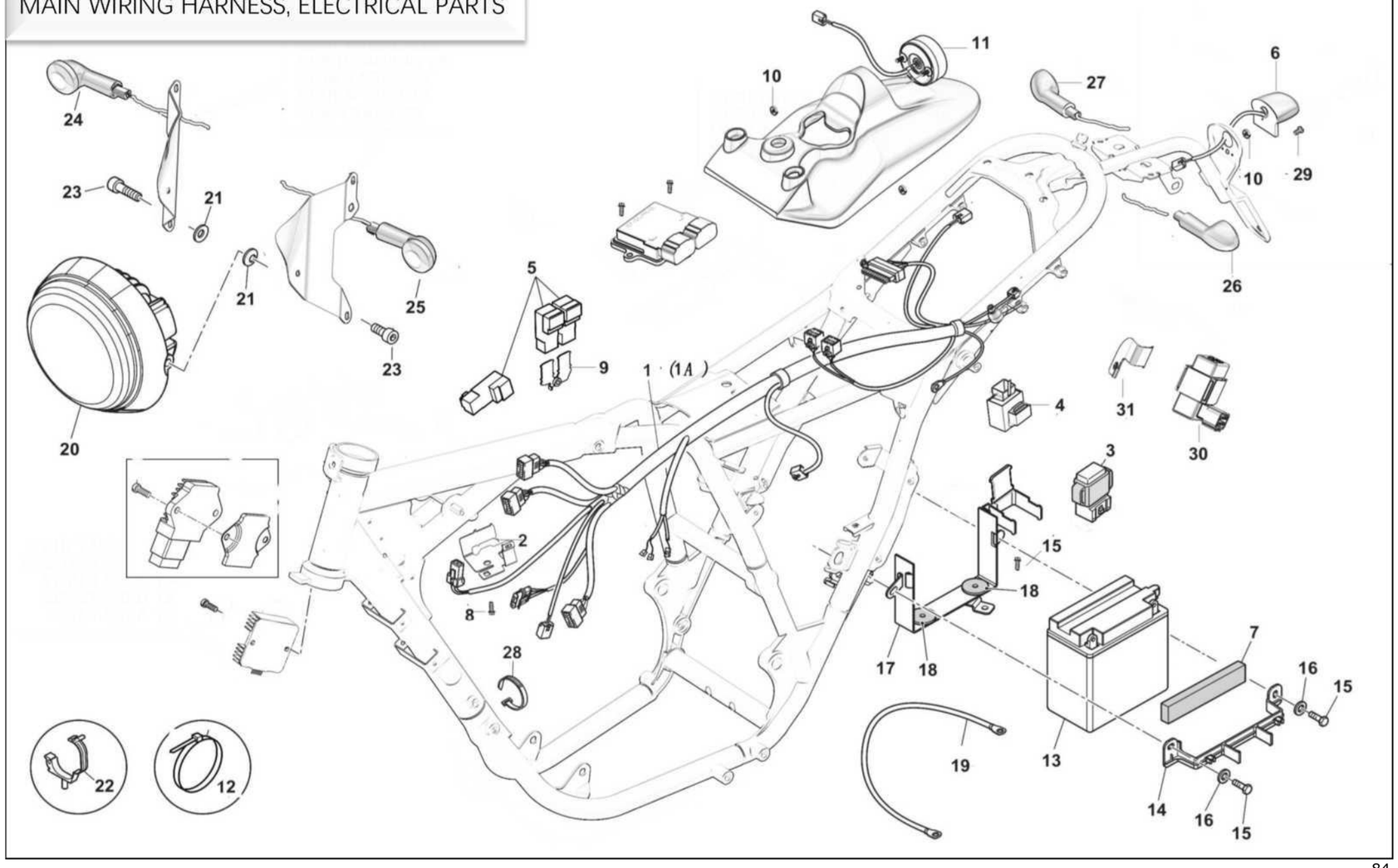

'

M A I N WIRING HARNESS, ELECTRICAL PARTS

| Notes | No | Code No | NAME | Q.ty | |
|---|---|---|---|---|---|
| | 26 | E000P02317 | LH REAR INDICATOR | 1 | |
| | 27 | E000P02316 | RH REAR INDICATOR | 1 | |
| | 28 | 73010695 | CLAMP-188x4.8 | 11 | |
| | 29 | 10000397 | SCREW TCEI M5x12 | 1 | |
| **LXYPDJLO** | 30 | 10000011 | HEAD LIGHT TEMPERATURE CONTROLLER | 1 | |
| **LXYPDJLO** | 31 | 73032692 | HEAD LIGHT TEMPERATURE CONTROLLER BRACKET | 1 | |

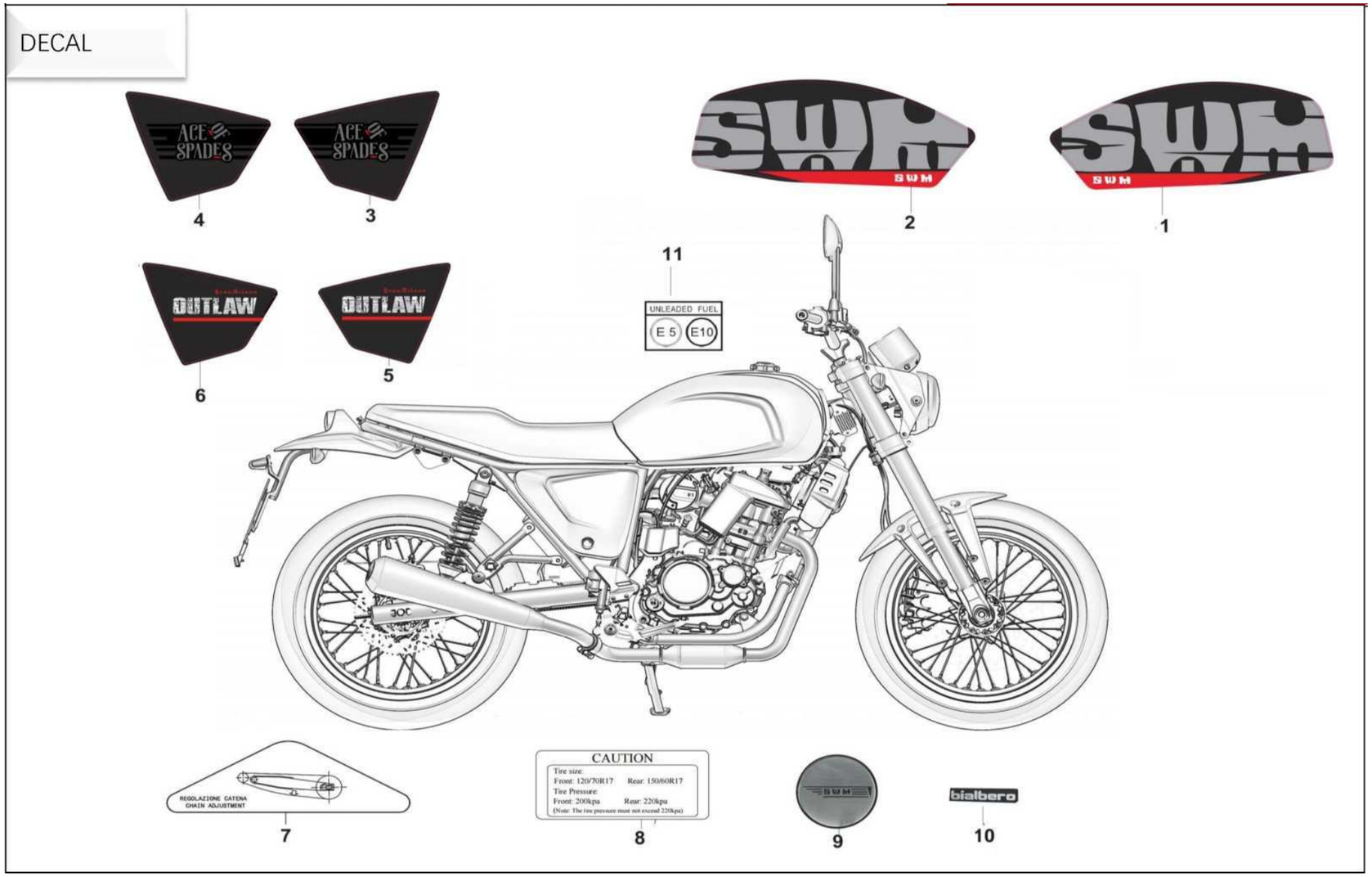
DECAL
ACE OF SPADES
4
ACE OF SPADES
3
SWM
2
SWM
1
OUTLAW
6
OUTLAW
5
11
UNLEADED FUEL
E 5
E10
REGOLAZIONE CATENA
CHAIN ADJUSTMENT
7
CAUTION
Tire size:
Front: 120/70R17
Rear: 150/60R17
Tire Pressure:
Front: 200kpa
Rear: 220kpa
(Note: The tire pressure must not exceed 220kpa)
8
SWM
9
bialbero
10

I mil I I I

## *ACE OF SPADES 125 ACE OF SPADES 125R OUTLAW 125*



'

DECAL

| Notes | No | Code No | NAME | Q.ty | |
|---|---|---|---|---|---|
| | 1 | F000P04362 | RH FUEL TANK STICKER | 1 | |
| | 2 | F000P04363 | LH FUEL TANK STICKER | 1 | |
| | 3 | F000P04371 | RH SIDE PANEL STICKER - BLACK | 1 | |
| | 4 | F000P04373 | LH SIDE PANEL STICKER - BLACK | 1 | |
| | 5 | F000P04365 | RIGHT SIDE PANE STICKER | 1 | |
| | 6 | F000P04367 | LEFT SIDE PANE STICKER | 1 | |
| | 7 | 71011183 | CHAIN ADJUSTMENT TRANSFER | 1 | |
| | 8 | 71011182 | TYRE PRESSURE TRANSFER | 1 | |
| | 9 | M000P01373 | CLUTCH COVER STICKER | 1 | |
| | 10 | M0A0P00257 | IGNITION COVER STICKER | 1 | |
| | 11 | A000P03858 | FUEL TRANSFER | | |

***ACE OF SPADES 125*** ***ACE OF SPADES 125R*** ***OUTLAW 125*** MOTORCYCLE PARTS LISt

SWM®

I I I i II I I 86
ITALY -1971

IMi| 11111 I 11 11 11 I 11 I 11 11 11 I I I 11 I I I I I I I I I 11 I I I I I I I I I