SIX DAYS

500 – Katalog dílů

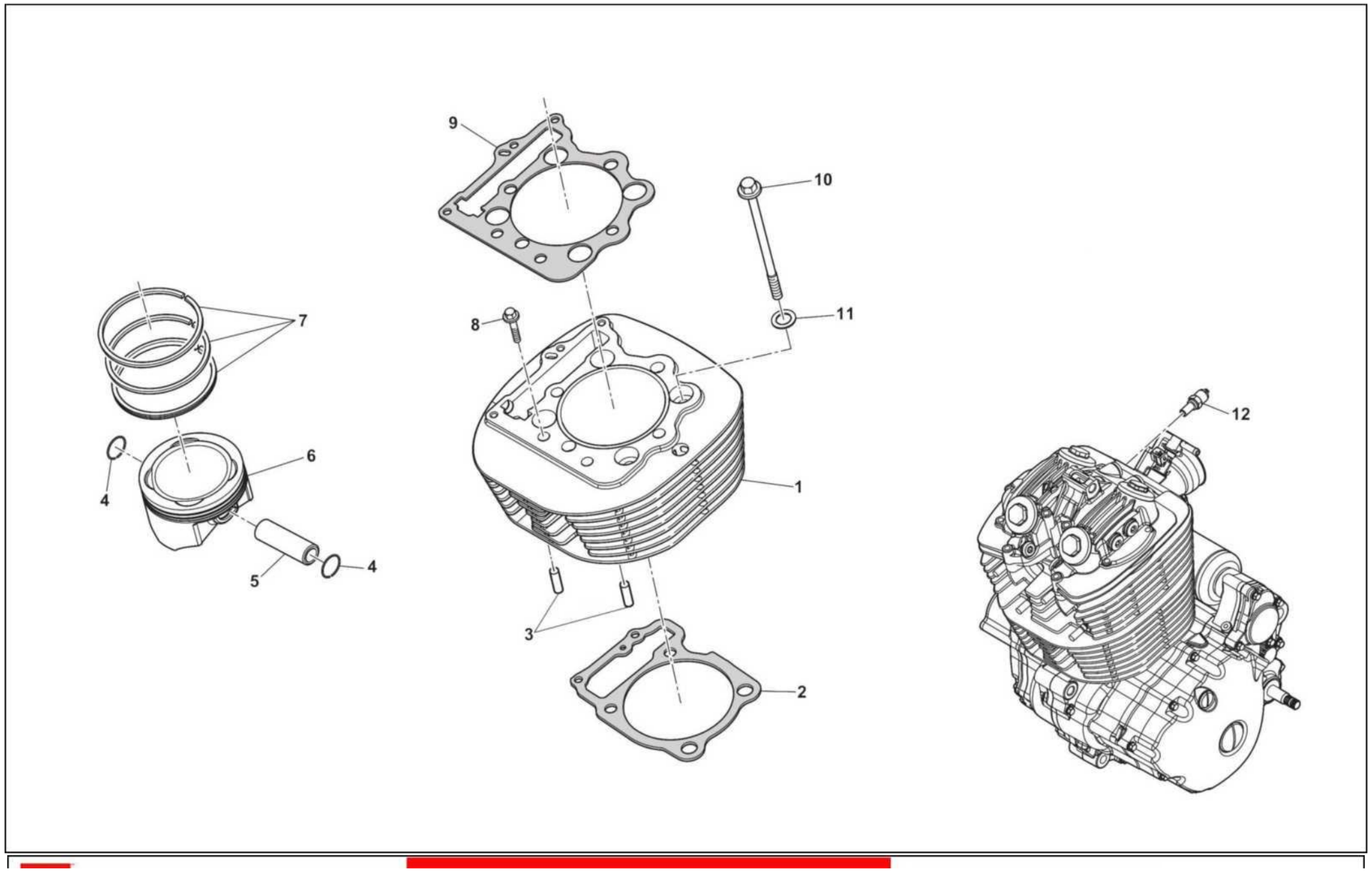
9
10
7
8
11
12
6
4
1
5
4
3
2

E-01 CYLINDER BODY

N o	Code No	NAME	Q.ty	
1	27010699	Cylinder body	1	
2	72130598	Gasket-cylinder body	1	
3	72060091	Dowel pin-10.5*12*20	2	
4	72080065	Shield ring-piston pin	2	
5	21040044	Piston pin	1	
6	21020161	P isto n	1	
7	21030595	Piston ring	1	
8	72010388	Bolt-M6*32	2	
9	72130691	Gasket-cylinder head	1	
10	72011371	Connecting bolt-cylinder body-M10*1.25-100	4	
11	72040577	Iron washer-10.8*18.6*2	4	
12	31350076	Temperature sensor	1	

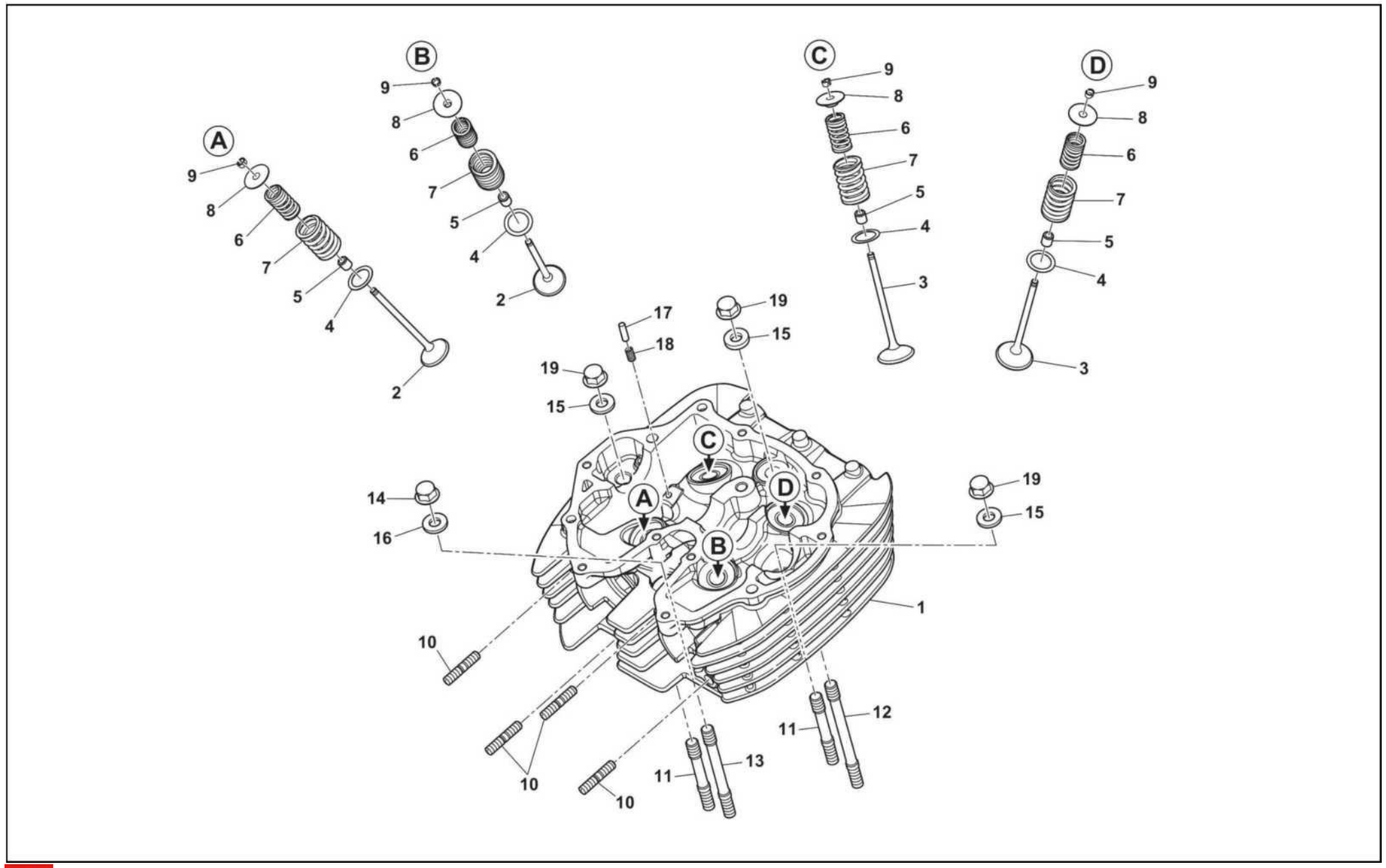
A
B
C
D
1
2
3
4
5
6
7
8
9
10
11
12
13
14
15
16
17
18
19

E-02 CYLINDER HEAD

No	Code No	NAME	Q.ty	
1	22011001	Cylinder head	1	
2	22020044	Exhaust valve	2	
3	22020043	Intake valve	2	
4	73130525	Iron washer	4	
5	72110026	Oil drip pan	4	
6	72120082	Valve inner spring	4	
7	72120083	Valve outer spring	4	
8	22030003	Upper holder, valve spring	4	
9	22040003	Valve lock nip	8	
10	72011809	Stud bolt-M8*41	4	
11	72011372	Cylinder bolt-M10*1.25-86	2	
12	72011373	Cylinder bolt-M10*1.25-118	1	
13	72011376	Cylinder bolt-M10*1.25-99	1	
14	72020583	Cap nut	1	
15	72040740	Iron washer	3	
16	72040370	Iron washer-10.3*25*4	1	
17	72060088	Pin-oil vent-1.5*4*16	1	
18	72120086	Oil nozzle spring	1	
19	72020583	Cap nut	3	

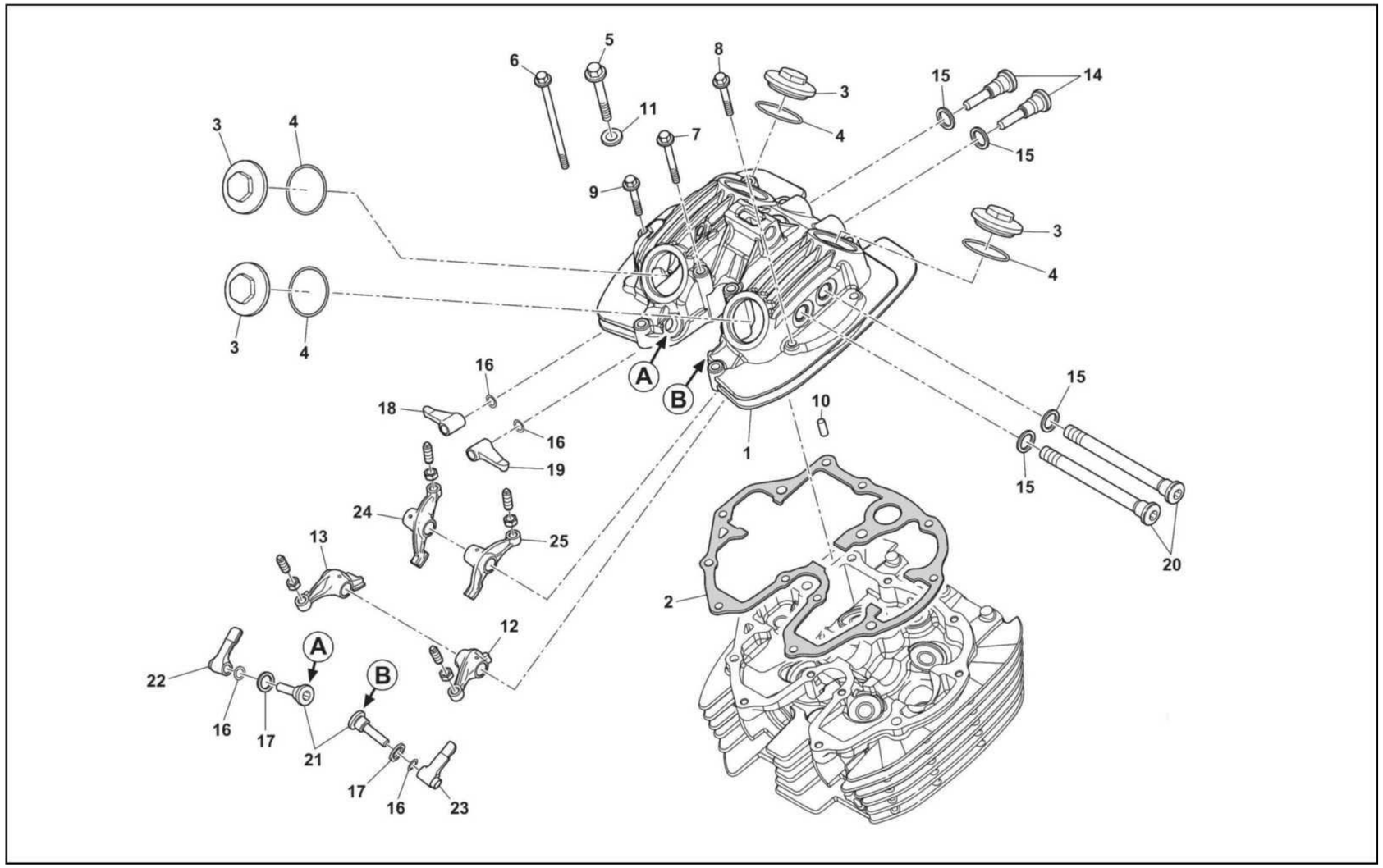
6
5
8
3
15
14
11
7
4
15
3
4
9
3
4
3
4
16
A
B
15
18
10
16
19
1
15
24
25
13
20
2
12
A
B
22
16
17
21
17
16
23

E-03 UPPER COVER,CYLINDERHEAD

No	Code No	NAME	Q.ty	
1	22150272	Upper cover, cylinder head	1	
2	72130690	Gasket-cylinder head upper cover	1	
3	22140006	Valve cap	4	
4	72150258	O-shape washer	4	
5	72011374	Bolt with disk-M8*70	1	
6	72011917	Bolt-M6*119	3	
7	72010392	Bolt-M6*65	2	
8	72010389	Bolt-M6*40	1	
9	72010169	Bolt-M6*35	6	
10	72060012	Dowel pin-8*14	2	
11	72040156	Washer- 8.5*18*2	1	
12	22050019	Main exhaust rocker arm/main inlet rocker arm(marked with A)	1	
13	22050020	Main exhaust rocker arm(marked with C)	1	
14	22070014	Vice inlet rocker arm axle(marked with A), left or right	2	
15	72040364	Copper washer-14.2*20*1.5	4	
16	73131480	Washer-8.2*12*0.3	4	
17	72040363	Copper washer-12.2*18.5*2	2	
18	22050018	Left/right, vice inlet rocker arm(marked with IN)	1	
19	22050018	Left/right, vice inlet rocker arm(marked with IN)	1	
20	22070015	Main rocker arm axle	2	
21	22070013	Vice exhaust rocker arm axle(marked with A), left or right	2	
22	22050016	Left, vice exhaust rocker arm(marked with A)	1	
23	22050017	Right, vice exhaust rocker arm(marked with B)	1	
24	22050019	Main exhaust rocker arm/main inlet rocker arm(marked with A)	1	
25	22050021	Main inlet rocker arm(marked with B)	1	

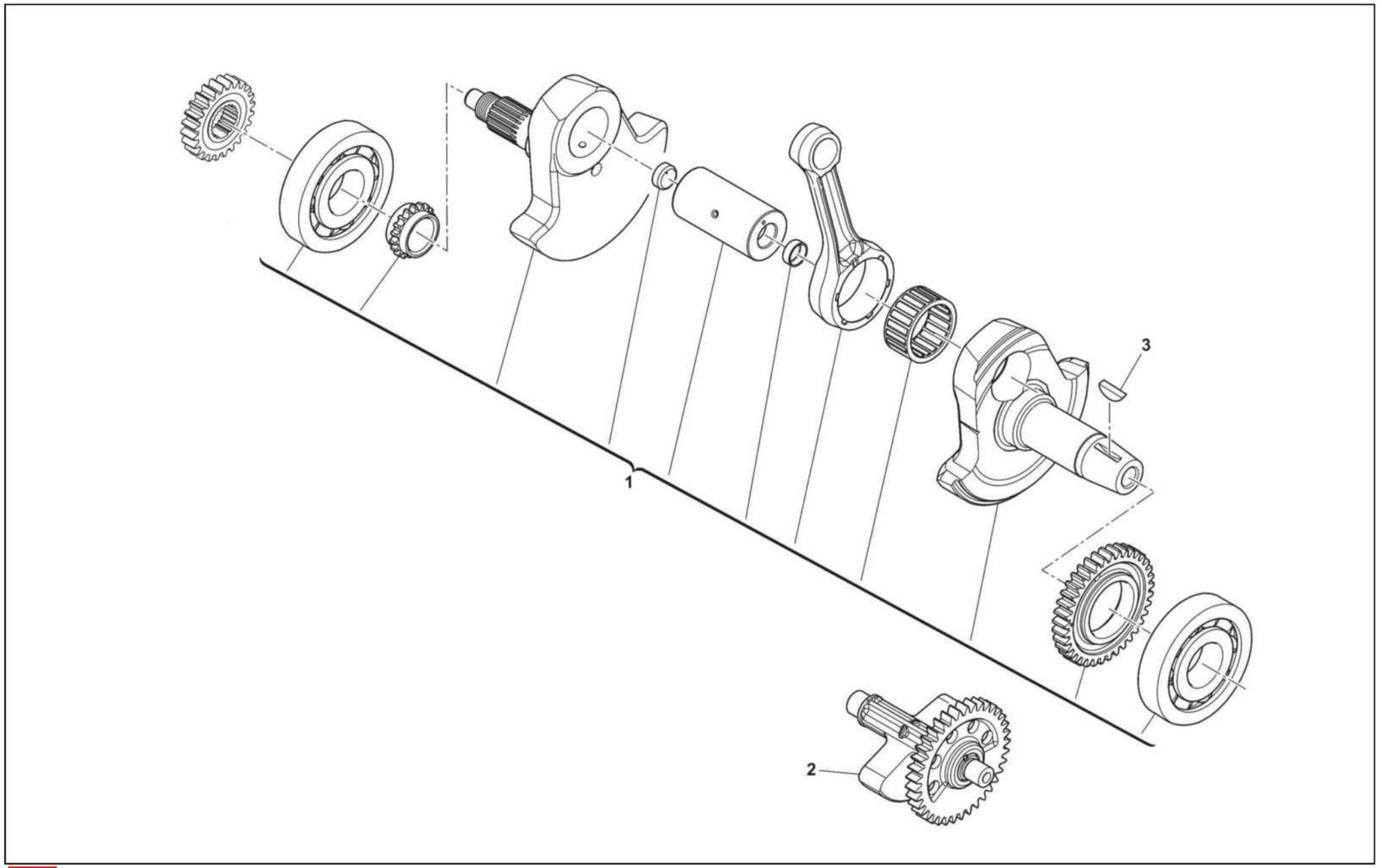
1
2
3

E-04 CRANKSHAFTCONNECTING ROD ASSY

No	Code No	NAME	Q.ty	
1	21220014	Crankshaft connecting rod assy	1	
2	21230001	Balance shaft	1	
3	21210014	Half round key	1	

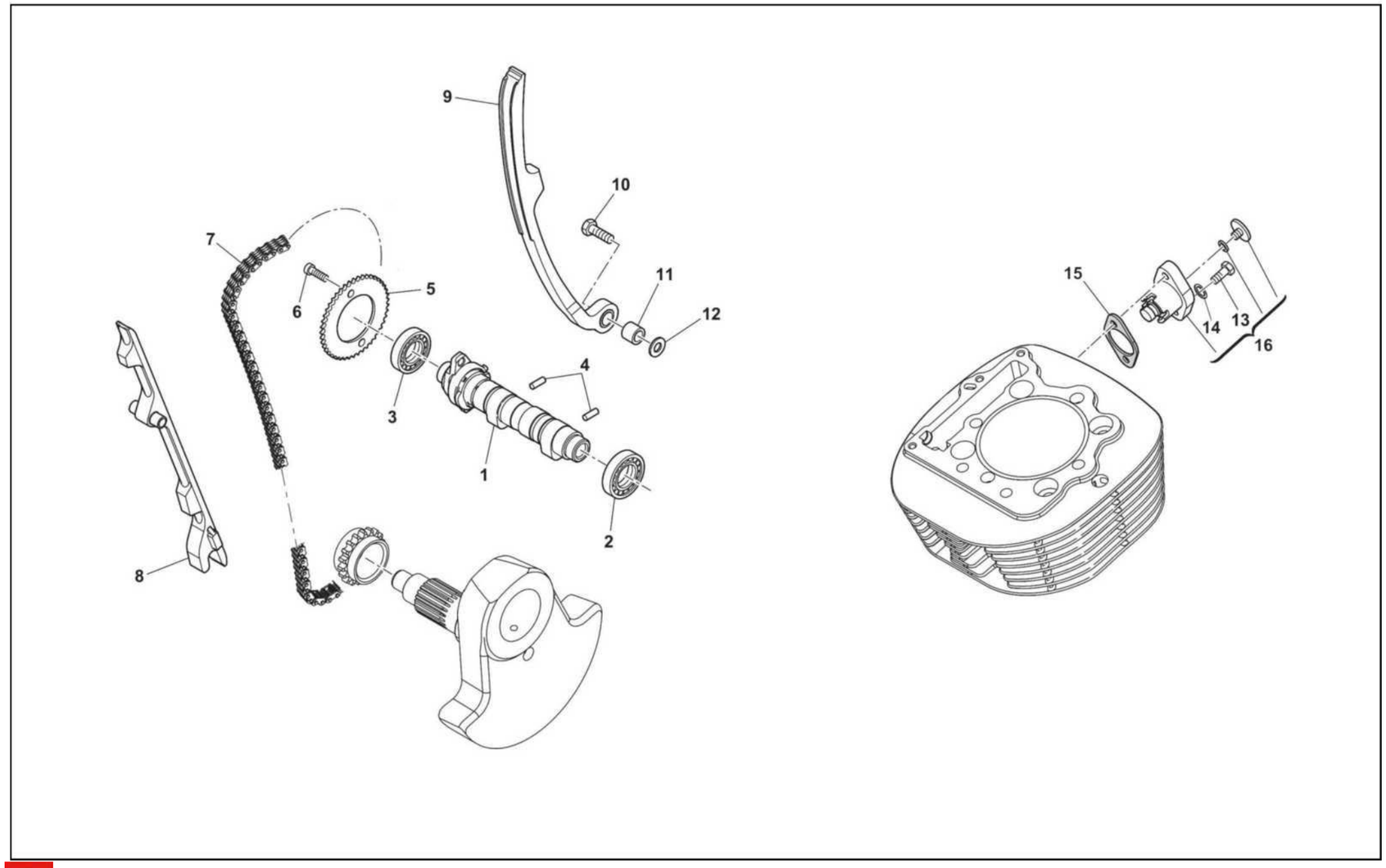

-*—— lxsl 1 ■■■

E-05 CAMSHAFTAXLE & TENSION DEVICE

No	Code No	NAME	Q.ty	
1	22080029	Camshaft axle	1	
2	70090199	Rolling bearing-61904-20*37*9	1	
3	70090198	Rolling bearing-61904/18-Z-18*37*9	1	
4	72060090	Dowel pin-cam-10*18	2	
5	15170067	Timing driven chain wheel	1	
6	72011369	Inside hexagonal bolt-M7*9.4	2	
7	15160015	Timing chain	1	
8	73011167	Guide plate	1	
9	73011166	Tension plate	1	
10	72010163	Bolt-M6*25	1	
11	72060089	Bush-tension board-6*10*9.2	1	
12	72040167	Washer-output axle-6.5*14*1	1	
13	72010157	Bolt-M6*16	2	
14	72040361	Copper washer-6.2*12.5*1.2	2	
15	72130438	Gasket-tension device	1	
16	15150013	Tension device	1	

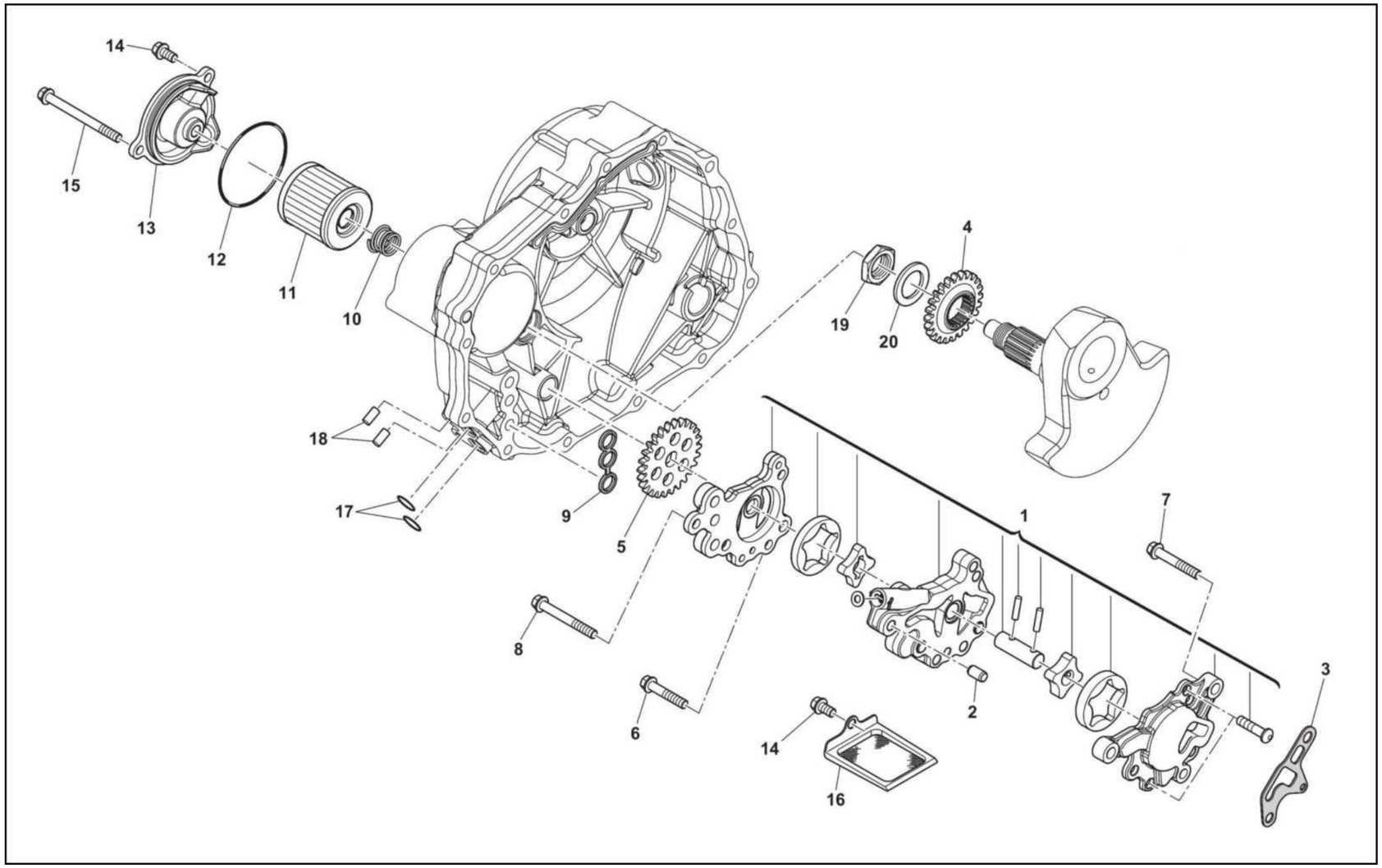
14
15
13
12
11
10
4
19
20
18
17
9
5
1
7
8
6
2
3
14
16

E-06 OIL PUMP ASSY

No	Code No	NAME	Q.ty	
1	20010077	Oil pump assy	1	
2	72060012	Dowel pin-8*14	2	
3	72130423	Gasket-engine oil pump	1	
4	20060005	Drive gear, oil pump	1	
5	20060006	Driven gear, oil pump	1	
6	72010388	Bolt-M6*32	1	
7	72010389	Bolt-M6*40	1	
8	72010173	Bolt-M6*50	1	
9	72150127	Gasket-engine oil pump	1	
10	72120159	Filter spring	1	
11	20030030	Filter element	1	
12	72150220	O shaped washer-fitler-60*2.4	1	
13	14090073	Engine oil fitler cover	1	
14	72010157	Bolt-M6*16	2	
15	72010394	Bolt-M6*90	1	
16	11060005	Engine oil filting net	1	
17	72150213	O shaped ring-oil pipe-10*1.9	2	
18	72060019	Dowel pin-10*16	2	
19	72020360	Hex nut-M18*1	1	
20	72040367	Iron washer-18.2*32*2	1	

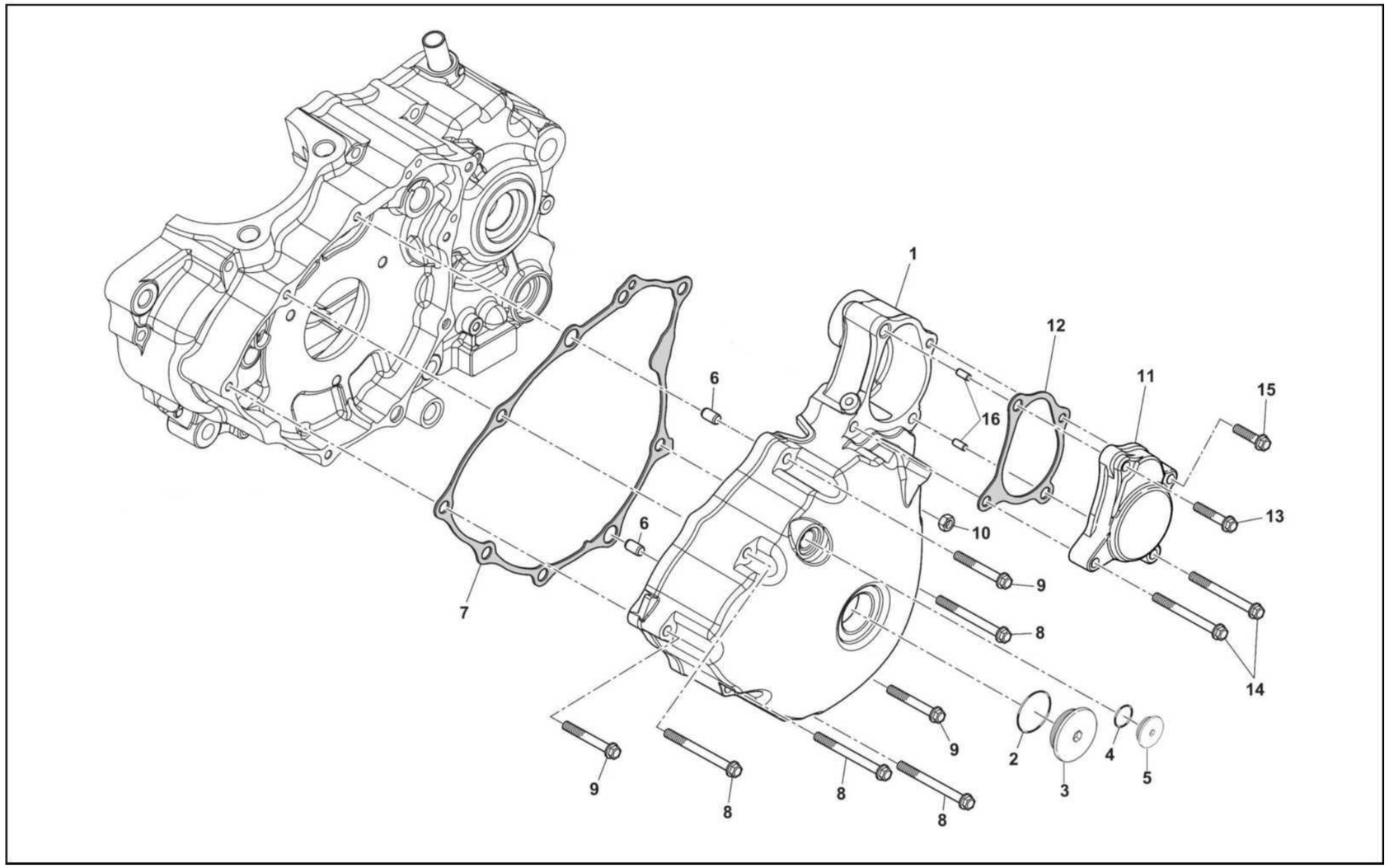
1
2
3
4
5
6
6
7
8
8
8
8
9
9
9
10
11
12
13
14
15
16

E-07 FRONT COVER,LEFT CRANKCASE ASSY

No	Code No	NAME	Q.'y	
1	14010970	Front cover, left crankcase assy	1	
2	72150152	O-shape washer	1	
3	14060063	Larger inspection hole cover	1	
4	72150153	O-shape washer	1	
5	14060064	Smaller inspection hole cover	1	
6	72060014	Dowel pin-10*20	2	
7	72130595	Gasket-left crankcase cover	1	
8	72010174	Bolt-M6*60	4	
9	72010173	Bolt-M6*50	2	
10	72020596	Nut	1	
11	14070206	Dual gear cover	1	
12	72130395	Gasket-start motor cover	1	
13	72010169	Bolt-M6*35	1	
14	72010392	Bolt-M6*65	2	
15	72010387	Bolt-M6*28	1	
16	72060012	Dowel pin-8*14	2	

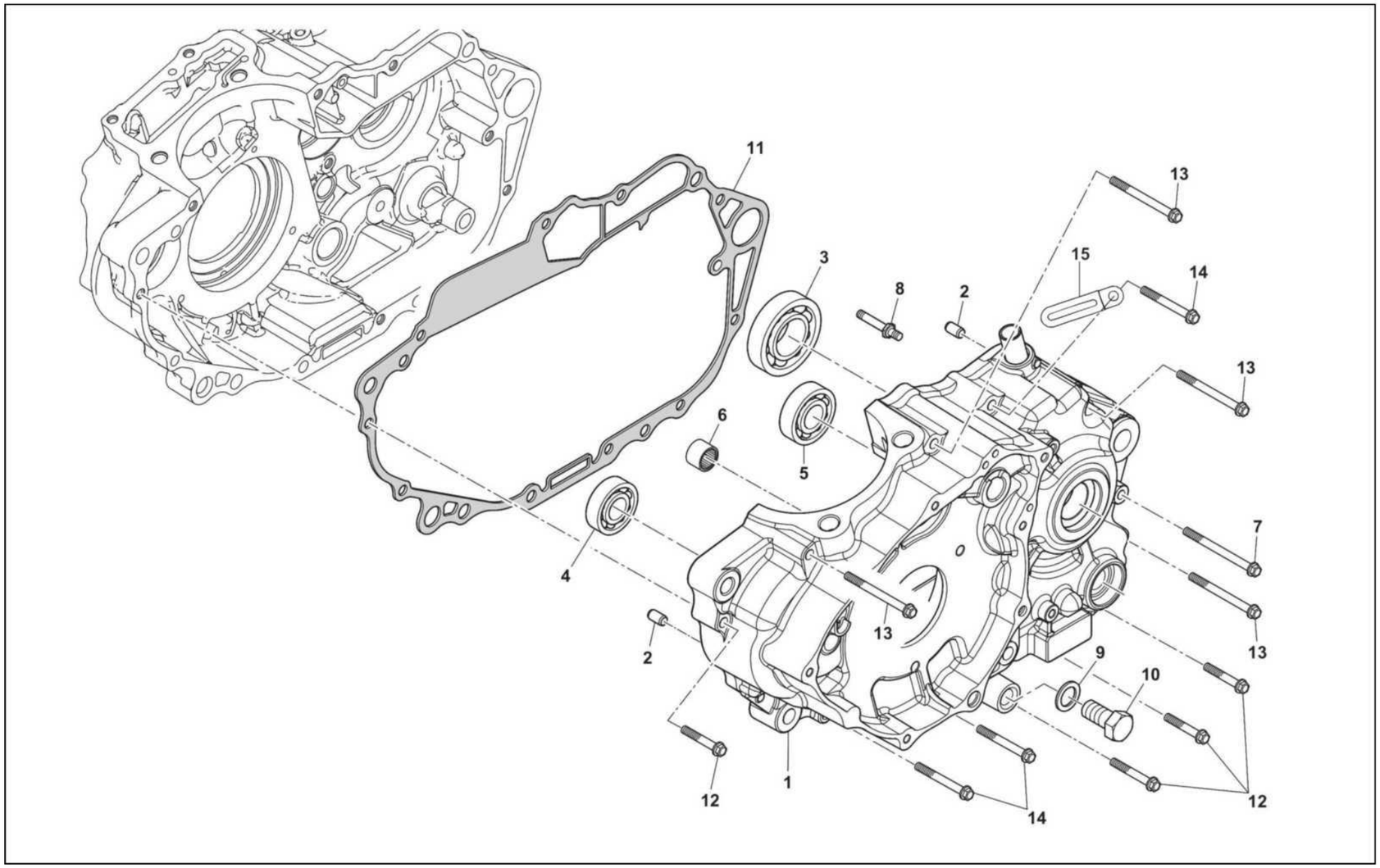
11
13
3
15
14
8
2
13
6
5
7
4
13
2
13
9
10
12
1
14
12

E-08 LEFT CRANKCASE ASSY

No	Code No	NAME	Q.ty	
1	11010664	Left crankcase assy	1	
2	72060019	Dowel pin-10*16	2	
3	70090194	Rolling bearing-6006/25-25*55*13	1	
4	70090193	Rolling bearing-6301/13/C3-13*37*12	1	
5	70090195	Rolling bearing-6203Z-17*40*12	1	
6	70090016	Needle bearing-HK121610	1	
7	72010176	Bolt-M6*80	1	
8	72011364	Stud bolt-M6*63	1	
9	72040159	Aluminium washer-12.5*20*1.5	1	
10	72012089	Oil drain bolt-M12*1.25*15	1	
11	72130390	Gasket-crankcase	1	
12	72010169	Bolt-M6*35	4	
13	72010392	Bolt-M6*65	5	
14	72010173	Bolt-M6*50	3	
15	73031854	Wire clip	1	

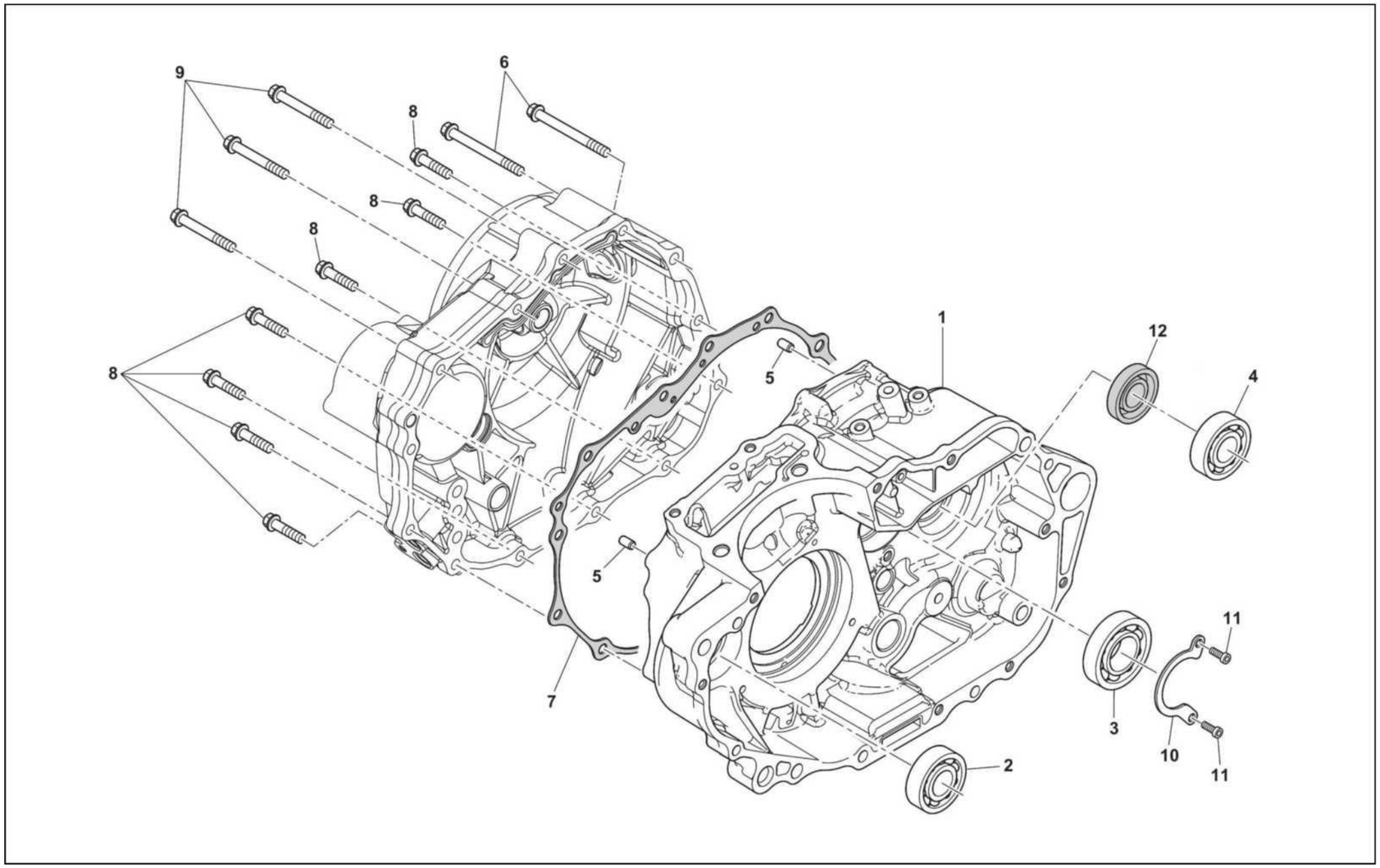
9
6
8
8
8
8
1
12
4
5
5
7
11
3
10
11
2

E-09 RIGHT CRANKCASEASSY

No	Code No	NAME	Q.'y	
1	12010623	Right crankcase assy	1	
2	70090192	Rolling bearing-6302/C3-15*42*13	1	
3	70090228	Rolling bearing	1	
4	70090197	Rolling bearing-60/22/18-Z-18*44*12	1	
5	72060012	Dowel pin-8*14	2	
6	72010392	Bolt-M6*65	2	
7	72130607	Gasket-right crankcase cover	1	
8	72010387	Bolt-M6*28	7	
9	72010390	Bolt-M6*45	3	
10	73131479	Bearing platen	1	
11	72011368	Inside hexagonal bolt-M6*16	2	
12	72110096	Secondary shaft oil seal-18*34*5	1	

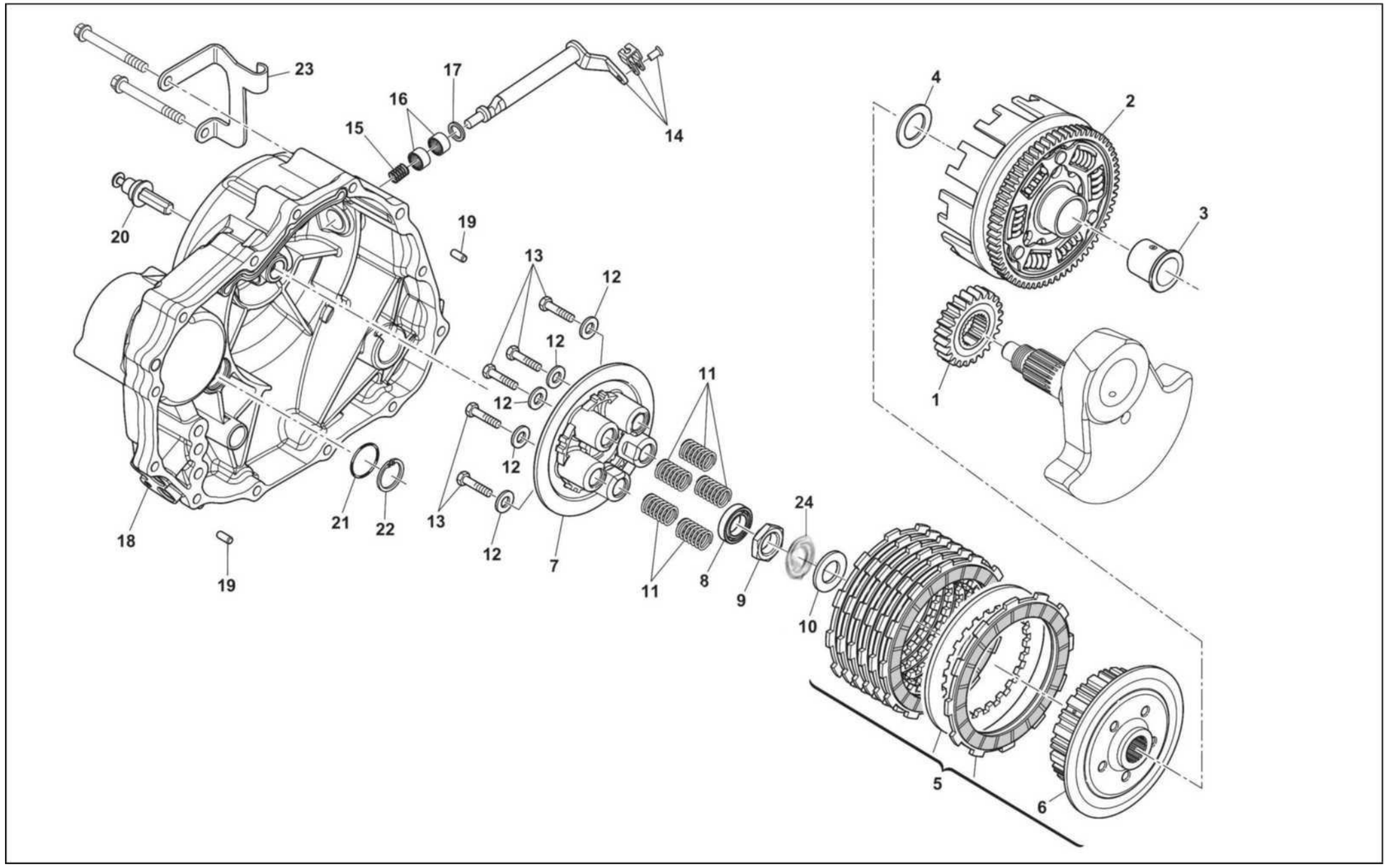
23
17
16
15
14
20
19
13
12
12
12
11
12
21
22
13
24
18
19
12
7
11
8
9
10
4
2
3
1
5
6

E-10 CLUTCH BADY & RIGHT CRANKCASE COVER

No	Code No	NAME	Q'y	
1	24020044	Primary drive gear	1	
2	24120157	Clutch cover assy	1	
3	24070261	Clutch shaft sleeve-922*928*29.3	1	
4	24070204	Clutch washer-922*935*2	1	
5	24070282	Clutch center sleeve assembly	1	
6	24070251	Clutch center sleeve	1	
7	24070256	Push disc plate	1	
8	24070205	olling bearing-61903/P6	1	
9	24070163	Locking nut-drive gear-M18*1	1	
10	24070222	Washer	1	
11	24070347	Clutch spring	5	
12	72040197	Washer	5	
13	72010097	Bolt	5	
14	24030031	Clutch operating lever	1	
15	72120084	Clutch lever spring	1	
16	70090016	Needle bearing-HK121610	2	
17	72110098	Clutch lever oil seal-12*18*5	1	
18	13011908	Right crankcase cover	1	
19	72060012	Dowel pin-8*14	2	
2 0	24070295	Clutch push rod	1	
21	72110097	Right crank-14*22*5	1	
22	72080066	Inner shield ring	1	
23	73131610	Clutch cable plate	1	
24	24070165	Butterfly washer-9l8*930*2	1	

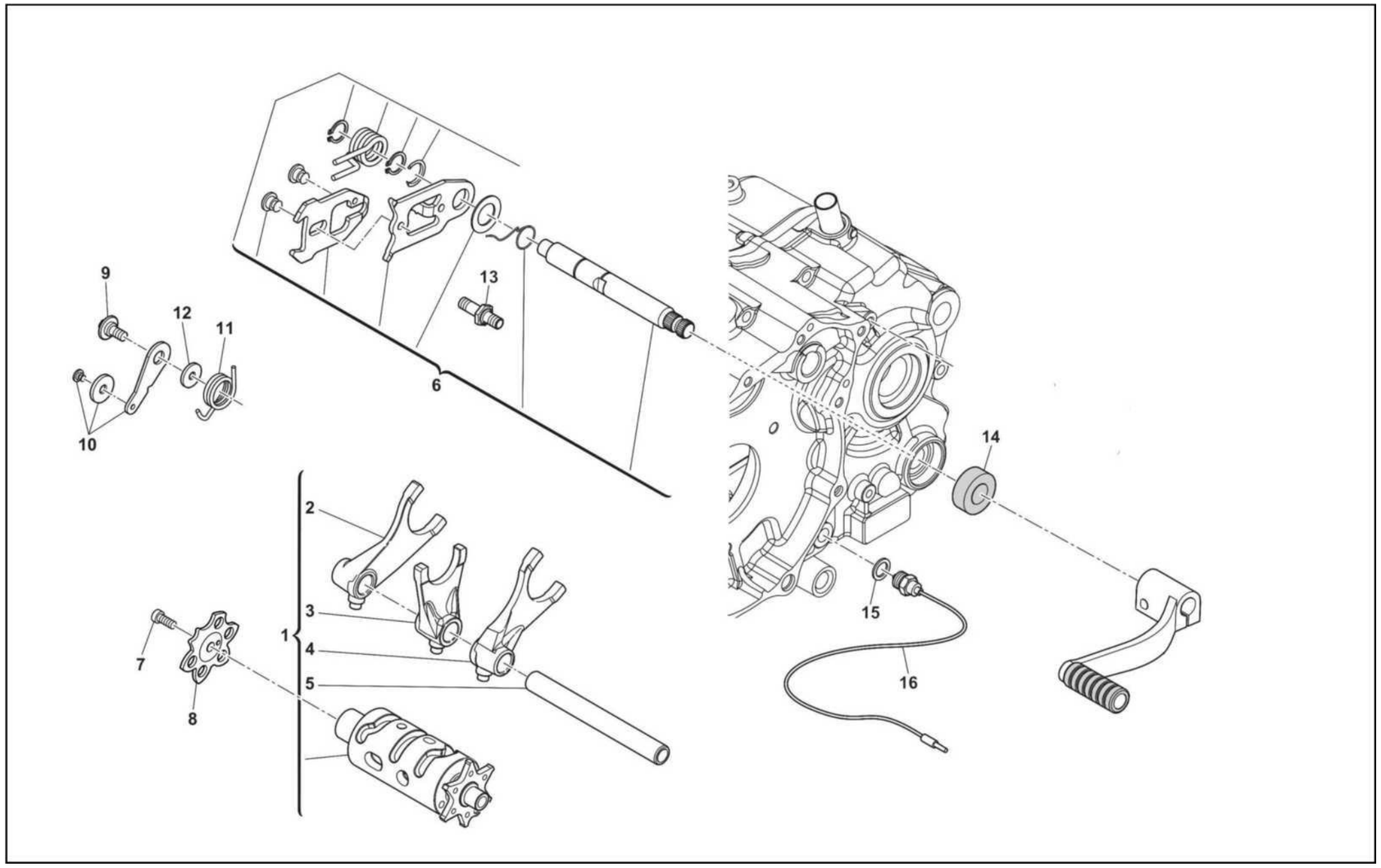
9
12
11
10
13
6
2
3
1
4
5
7
8
14
15
16

E-11 GEARSHIFT DRUM ASSY & GEARSHIFT AXLE ASSY

No	Code No	NAME	Q.ty	
1	15050092	Gearshift drum assy	1	
2	15140064	Shifting fork, left	1	
3	15140065	Shifting fork, middle	1	
4	15140066	Shifting fork, right	1	
5	15140067	Shifting fork axle	1	
6	15070078	Gearshift axle assy	1	
7	72011167	Bolt	1	
8	15090009	Gearshift wheel	1	
9	72011366	Bolt-Gear positioning plate-M6*16.5	1	
10	15080015	Gear positioning plate	1	
11	72120085	Engine spring-shift drum positioning leaf spring	1	
12	72040167	Washer-output axle-6.5*14*1	1	
13	72011363	Bolt-gear shifting positioning-M8*41	1	
14	72110009	Sealing ring-14*28*7	1	
15	72040362	Copper washer-10.2*14*1	1	
16	11040153	Gear indicator	1	

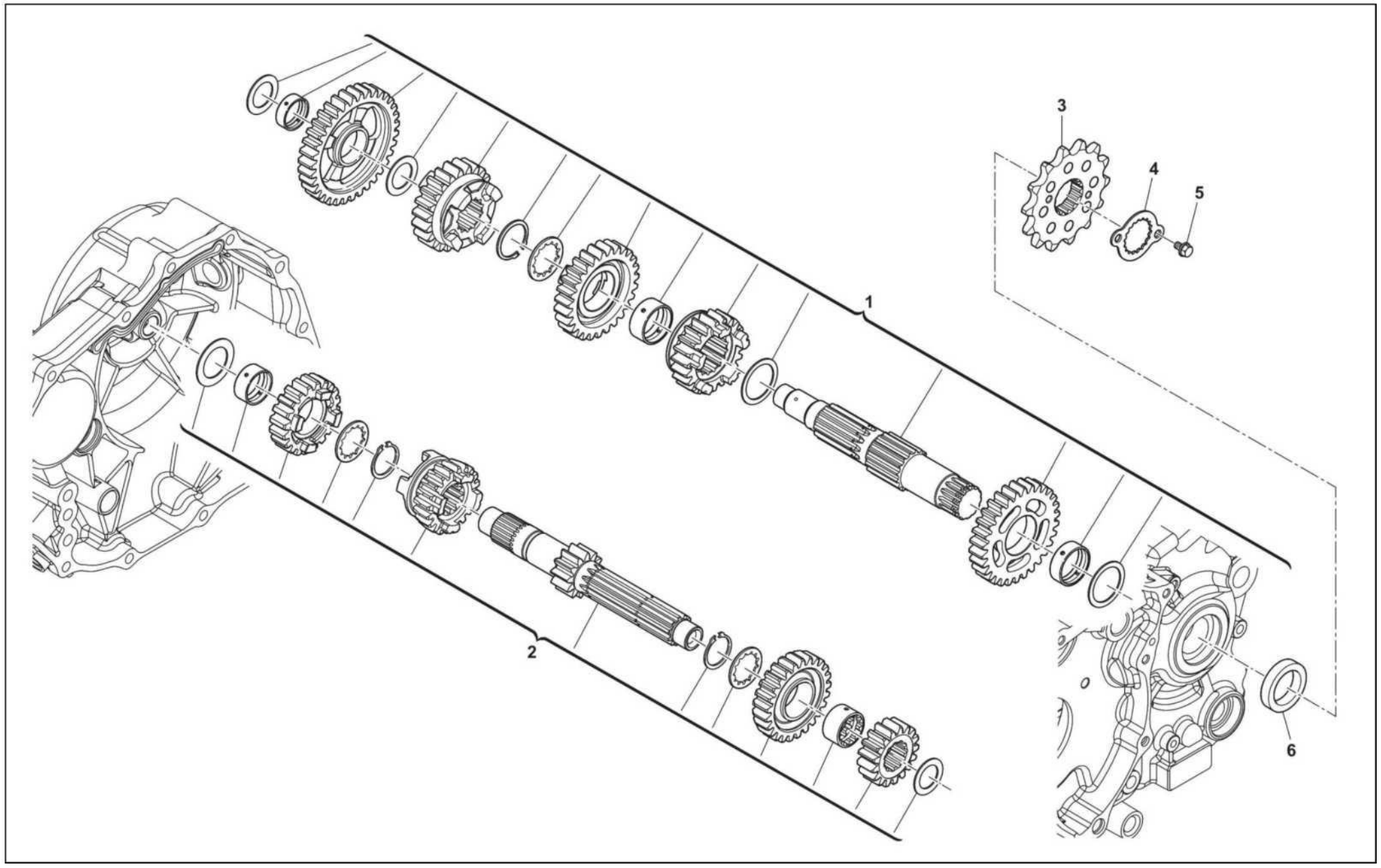
1
2
3
4
5
6

E-12 MANI SHAFT ASSY & COUNTERSHAFT ASSY

No	Code No	NAME	Q'y	
1	15020152	Main shaft assy	1	
2	15030198	Countershaft assy	1	
3	15170066	Output chain wheel	1	
4	73131476	Output sprocket retainer plate	1	
5	72010989	Bolt M6*12	2	
6	72110095	Secondary shaft oil seal-25*35*5	1	

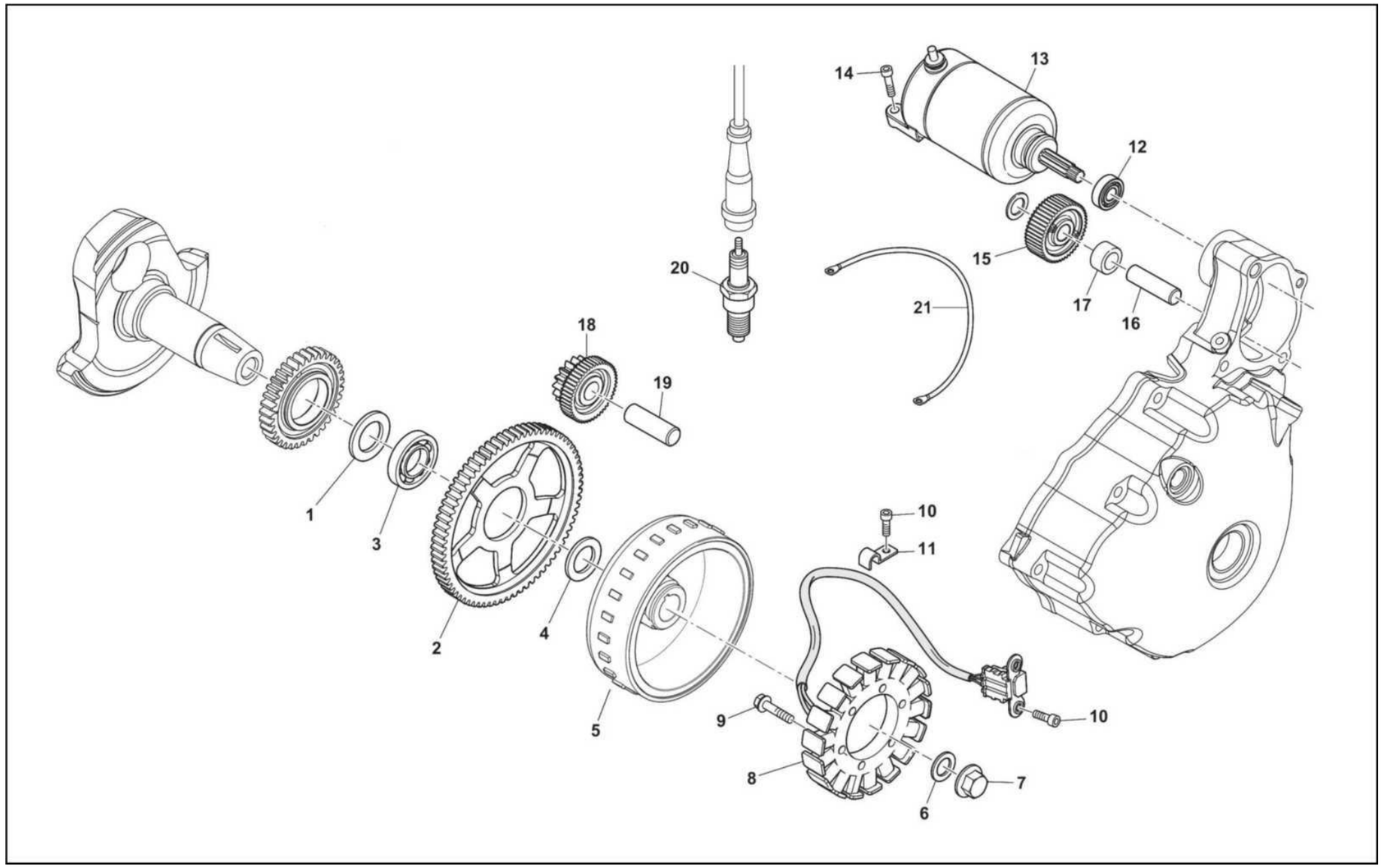
14
13
12
15
17
16
21
20
18
19
1
3
2
4
5
10
11
9
8
6
7
10

E-13 STARTING MOTOR

No	Code No	NAME	Q.ty	
1	72040358	Washer- 30*42*5.7- G G r15	1	
2	15110018	Gear wheel assy, starting clutch assembly	1	
3	70090092	Bearing-30*35*26	1	
4	72040359	Washer-29.2*38.4*3.7-GGr15	1	
5	31150156	Rotor, magneto	1	
6	72040360	Washer-12.6*30*5-GGr15	1	
7	72011367	Bolt-magneto-M12*1.25-50	1	
8	31140136	Stator, magneto	1	
9	72010388	Bolt-M6*32	3	
10	72010157	Bolt-M6*16	3	
11	73131478	Nip press line	1	
12	70090200	Rolling bearing-6000-10*26*8	1	
13	31160510	Starting motor	1	
14	72010163	Bolt-M6*25	2	
15	15110020	Idle gear wheel, starting motor	1	
16	24080011	Kick starter shaft-8.9*13*47	1	
17	24080012	Bush, gear shaft-13.2*19.9*13.2	1	
18	15110019	Dual gear, hole type	1	
19	24080010	Double gear shaft 10.7*15*43	1	
20	31170020	Spark plug	1	
21	31320018	Ground wire	1	

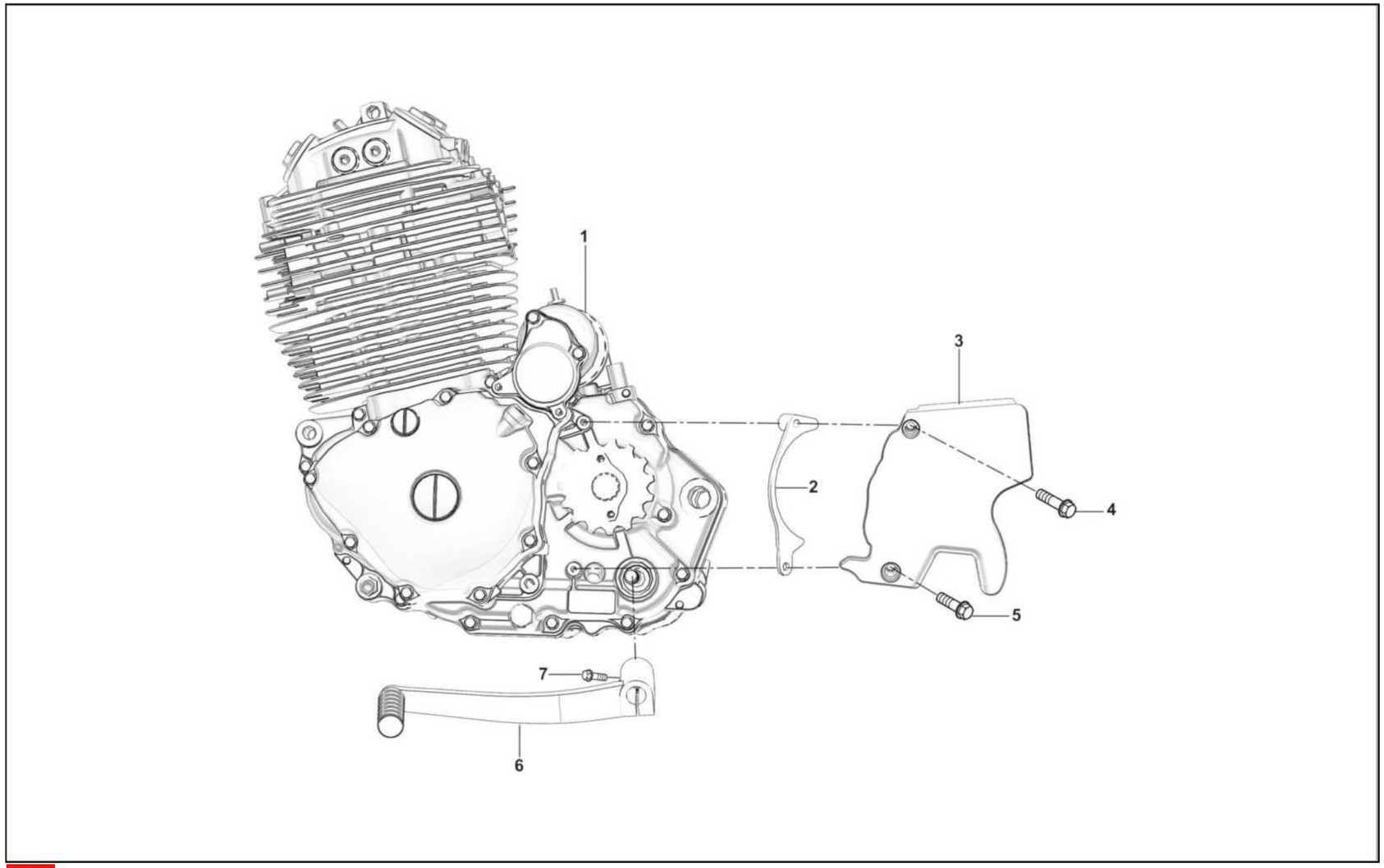
1
2
3
4
5
6
7

E-14 ENGINE ASSY

No	Code No	NAME	Q.'y	
1	03240009-0001	Engine assy	1	
2	73032012	Bracket-drive chain whell guide	1	
3	14021193	Rear cover, left crankcase assy	1	
4	10000368	Bolt M6*40	1	
5	10000435	Bolt M6*30	1	
6	F0A0A00515	Gearshift arm	1	
7	10000349	Bolt M6*20	1	

ITALY - 1971

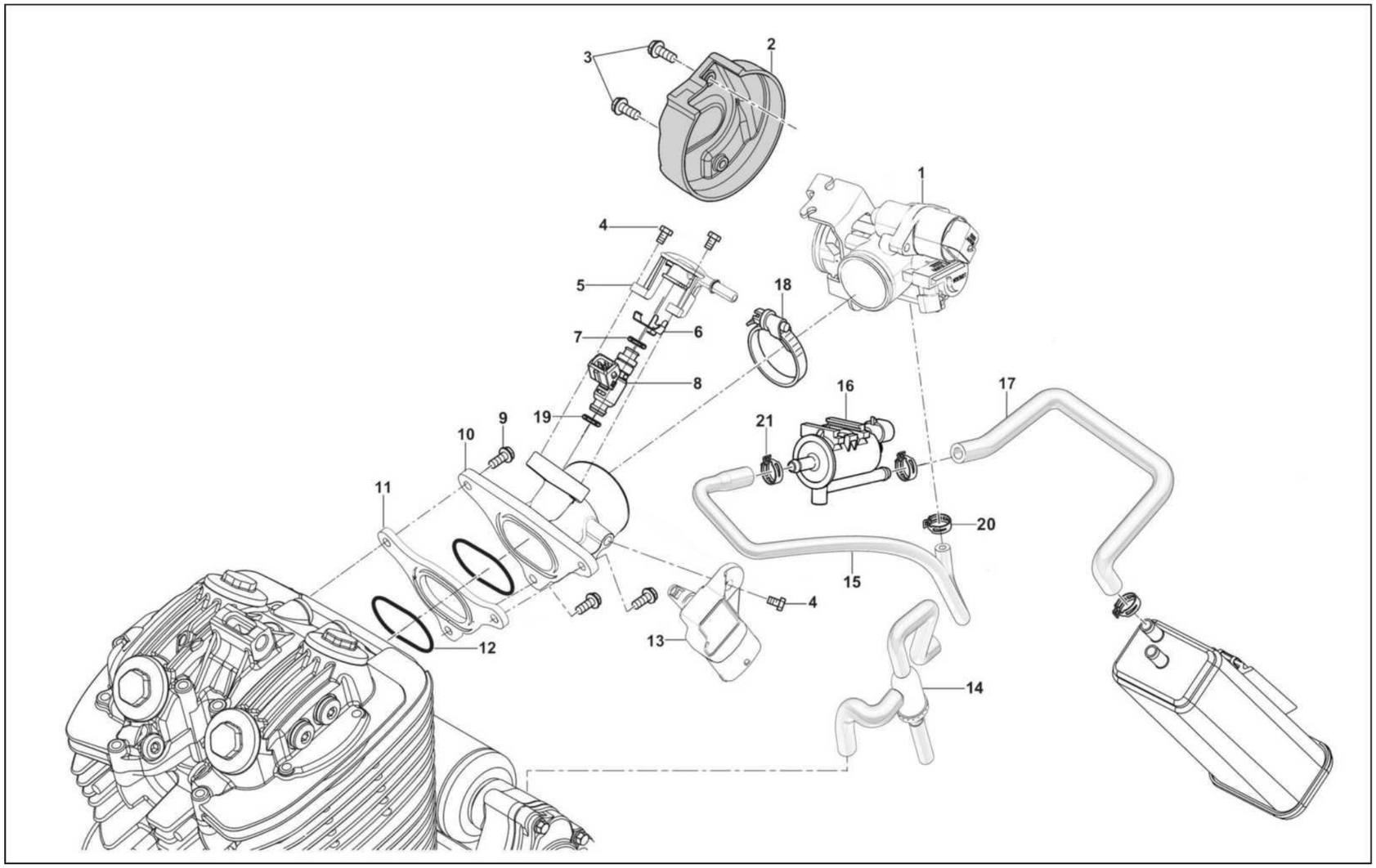
3
2
1
4
5
18
7
6
8
16
17
9
19
21
10
11
20
15
4
13
12
14

F-01 %nfM^/EFI

No	Code No	NAME	Q'y	
1	31350186	Throttle body assembly	1	
2	F000P00855	Solar term door trim	1	
3	72030078	Screw M5*12	2	
4	10000347	Bolt M6*14	3	
5	E000P04443	Nut,Fuel injector	1	
6	72080150	Fuel injector spring	1	
7	10000219	O-ring on fuel injector	1	
8	31350070	Fuel injector	1	
9	10000350	Bolt M6*25	3	
10	18031128	Air intake pipe	1	
11	72130573	Heat insulation gasket-air intake pipe	1	
12	72150219	O shaped ring-air intake pipe	2	
13	31350073	Fuel pressure regulator	1	
14	18050108	Oil and gas separator	1	
15	10000080	Hose with clip I	1	
16	31350090	Solenoid valve	1	
17	10000081	Hose with clip II	1	
18	10000166	Clip-air takein pipe hose	1	
19	10000218	Lower O-ring of fuel injector	1	
20	10000195	Leaf spring-98.5	1	
21	10000197	Leaf spring-910.5	1	

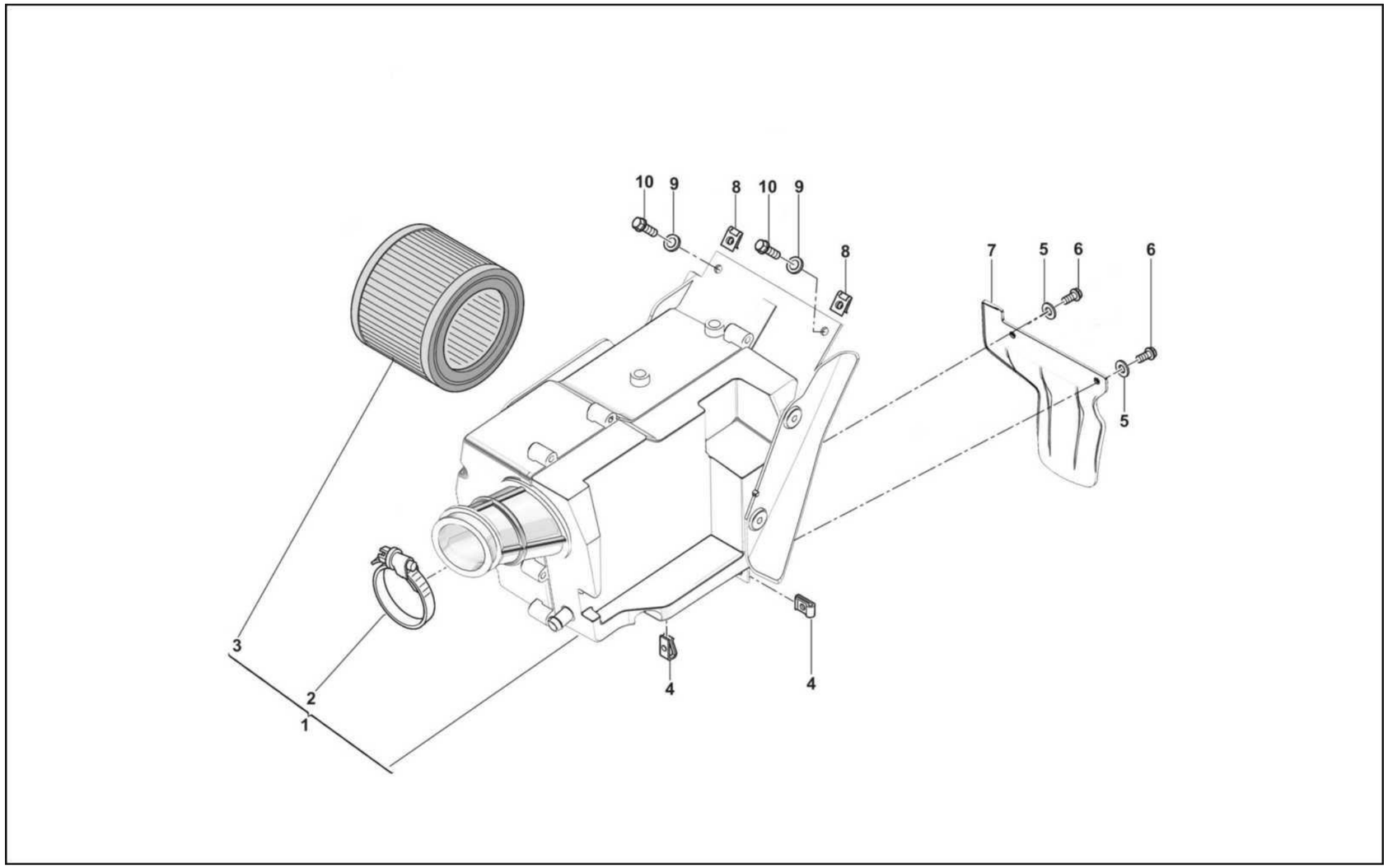
10
9
8
10
9
8
7
5
6
6
5
3
2
1
4
4

F-02 AIR FILTER

No	Code No	NAME	Q.ty	
1	18020429	Air cleaner assy	1	
2	18170097	Air filter hoop	1	
3	18130045	Air filter core	1	
4	U00055134	Clip Nut M5	2	
5	72040722	Washer 5	2	
6	10000355	Bolt M5*12	2	
7	F000P04105	Front water shield rubber-rear fender	1	
8	U00046893	Clip Nut M6	2	
9	72040555	Washer 6	2	
10	10000348	Bolt M6*16	2	

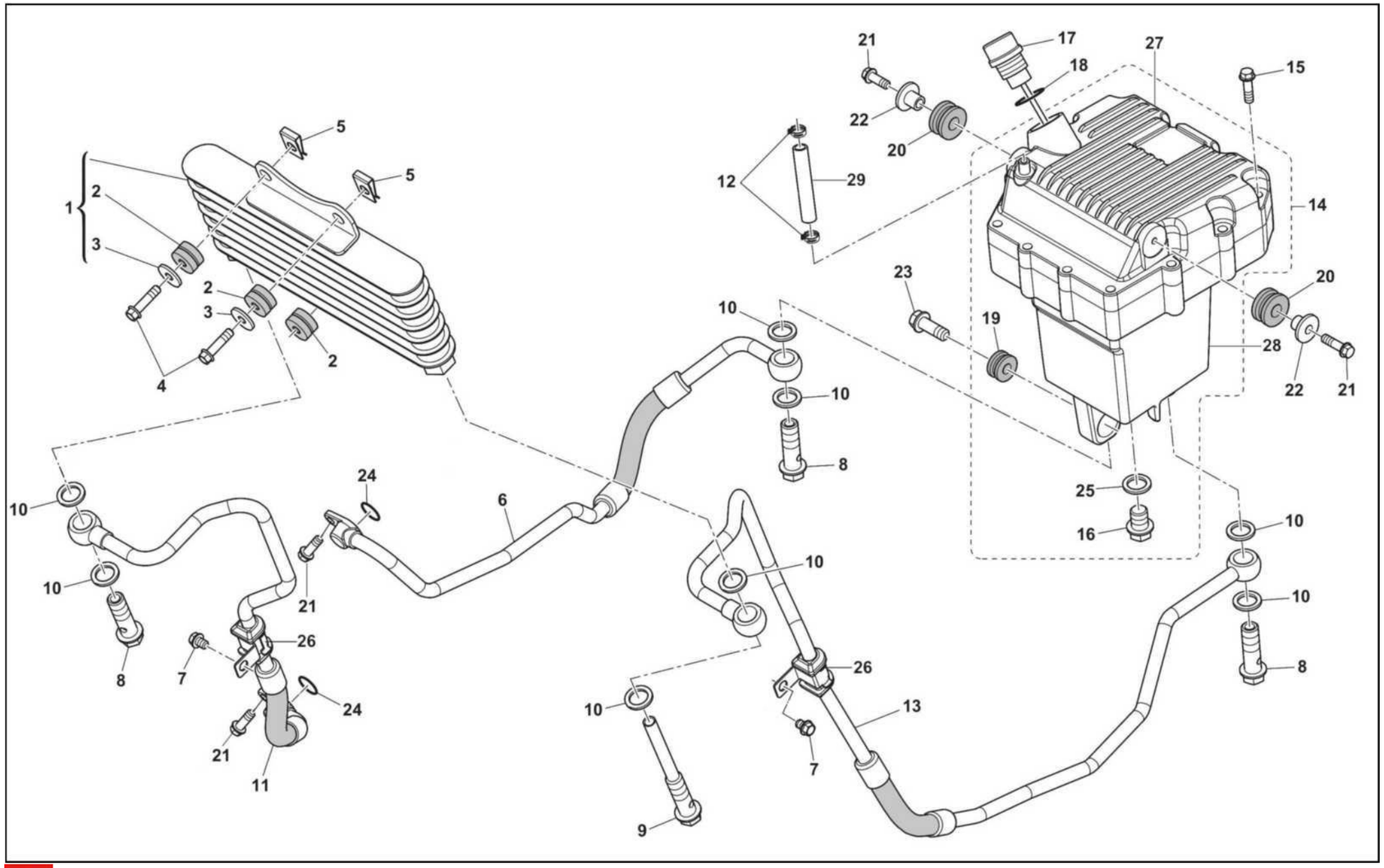
1
2
3
4
5
6
7
8
9
10
11
12
13
14
15
16
17
18
19
20
21
22
23
24
25
26
27
28
29

F-03 OIL COOLING SYSTEM

No	Code No	NAME	Q.ty	
1	F000A00447	Oil cooler assembly	1	
2	F000P00774	Buffer rubber for oil cooler	3	
3	F000P00775	Flanged Bush	2	
4	10000350	Bolt M6*25	2	
5	U00046893	Clip Nut M6	2	
6	F000P00452	Oil return line	1	
7	10000346	Screw M6*10	2	
8	72012141	Glib bolt M12*1.25*28	3	
9	F000P00742	Bolt	1	
10	72040159	Aluminium washer12.5*20*1.5	8	
11	F000A00843	Oil-in line	1	
12	10000198	Leaf spring-912.5	2	
13	F000A00844	Oil-out line	1	
14	M000A00643	Oil tank assy	1	
15	72010387	Bolt M6*28	12	
16	72012089	Oil drain bolt M12*1.25*15	1	
17	73012684	Dipstick	1	
18	72150018	O shaped washer 18*3.5	1	
19	73012333	Sleeve-axle-98*920*19	1	
20	73012321	Cushion-engine oil bottle	2	
21	10000349	Bolt M6*20	4	
22	72040551	Washer 6.5*18*7	2	
23	10000363	Bolt M8*1.25*30	1	
24	72150213	O shaped ring-oil pipe	2	
25	72040159	Washer 12.5*20*1.5	1	
26	73032259	Front brake oil pipe fixing clip	2	

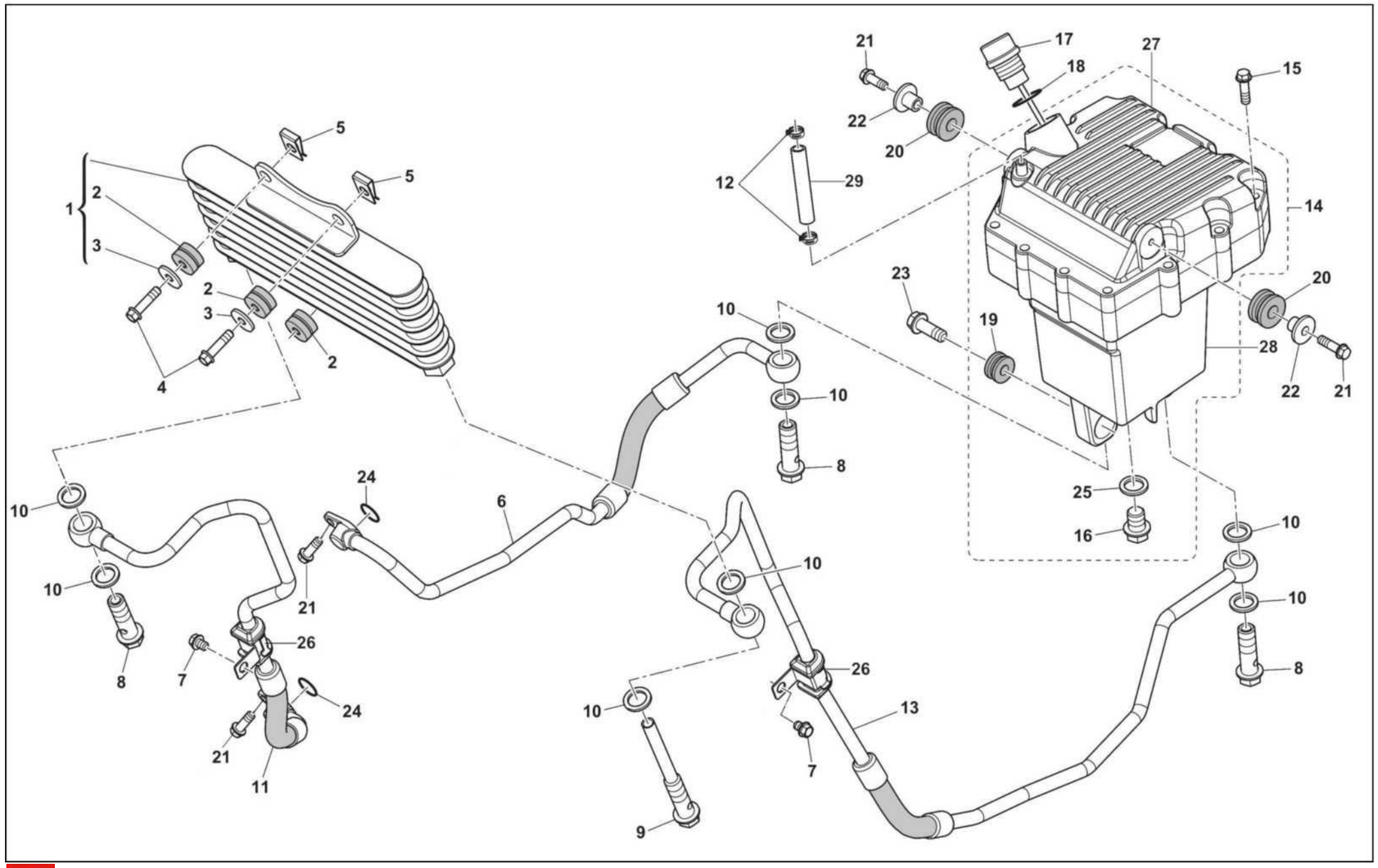
21
17
27
18
15
22
20
5
5
12
29
14
1
2
3
23
20
2
3
10
19
28
2
22
21
4
10
8
24
6
25
10
16
10
10
10
21
26
8
7
26
8
24
10
13
21
7
11
9

F-03 OIL COOLING SYSTEM

No	Code No	NAME	Q.ty	
27	16080018	Cover, Engine oil bottle	1	
28	16080019	Body, Engine oil bottle	1	
29	F000P02500	Engine cycle tube	1	

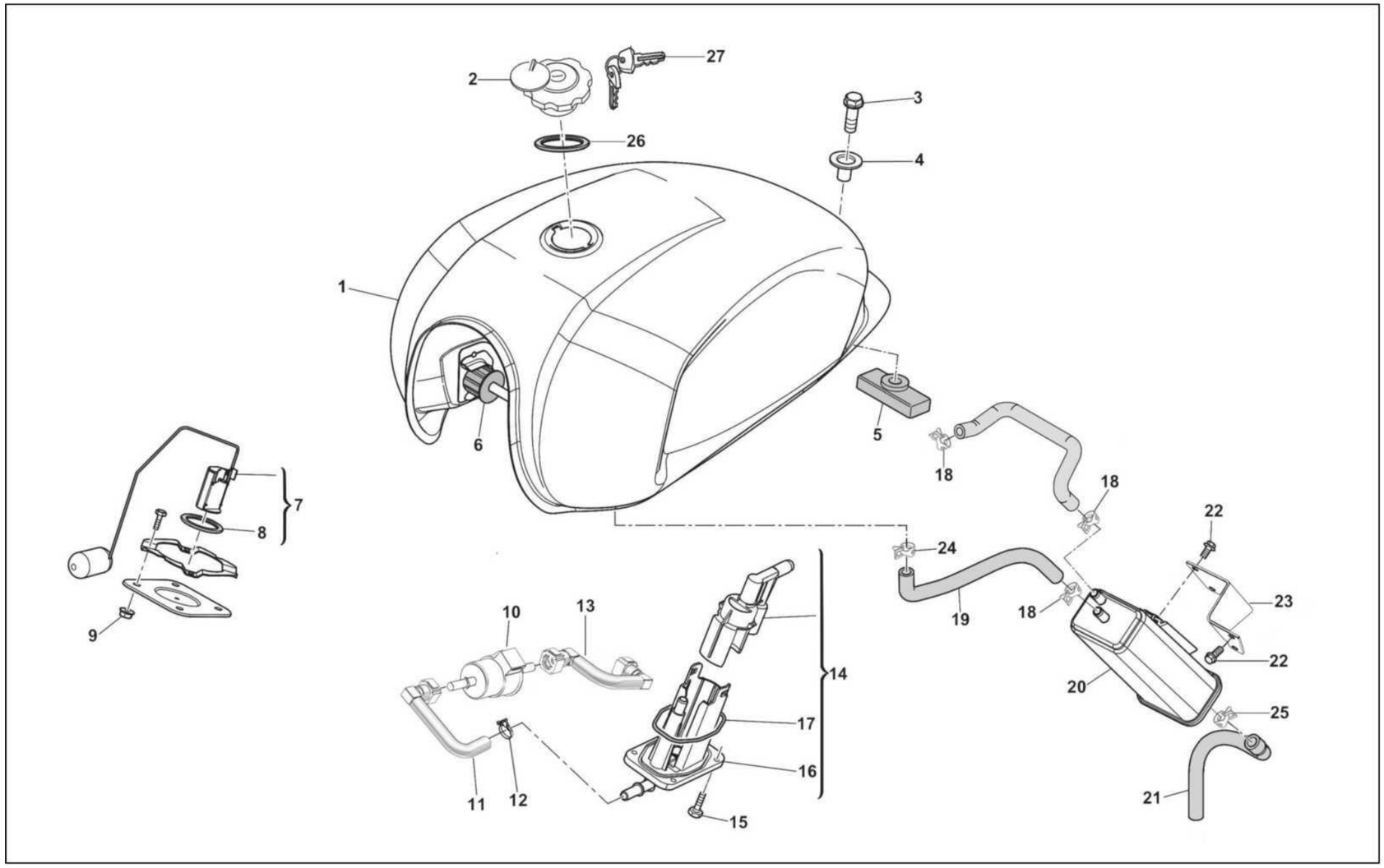
27
2
26
3
4
1
6
5
18
18
7
8
9
24
22
10
13
19
18
23
14
22
20
17
25
16
11
12
15
21

F-04 }'E^ FUEL TANK

No	Code No	NAME	Q.ty	
1-1	10000082	Irony fuel tank (Grass green)	1	
1-2	F000P0481 3	Irony fuel tank (Dark grey)	1	
2	10000192	Fuel tank lock	1	
3	10000431	Bolt M8*33	1	
4	70120233	Flanged bush 8.5*11.5*30*23	1	
5	F000P0248 2	Fuel tank rear cushion	1	
6	F000P0248 3	Front assembling rubber-fuel tank	2	
7	F000A0233 2	Fuel sensor	1	
8	31130117	Fuel sensor seal ring	1	
9	72020485	Nut M6	4	
10	16060013	Filter	1	
11	10000075	Oil pipe combination II	1	
1 2	10000243	Anchor ear-stainless steel	1	
13	10000074	Oil pipe combination I	1	
14	F000A0350 6	Fuel pump	1	
15	72030657	Screw M4*16	4	
16	10000496	Metal pressure plate of fuel pump	1	
17	10000497	Rubber sealing ring of fuel pump	1	
18	10000196	Leaf spring-911.5	3	
19	10000079	Adsorption rubber tube(evaporation pipe)	1	
20	18210017	Charcoal canister	1	
21	F000P01489	Desorption hose	1	
22	10000346	Screw M6*10	4	
23	73032657	Carbon canister bracket	1	
24	10000195	Leaf spring-98.5	1	
25	10000198	Leaf spring-912.5	1	

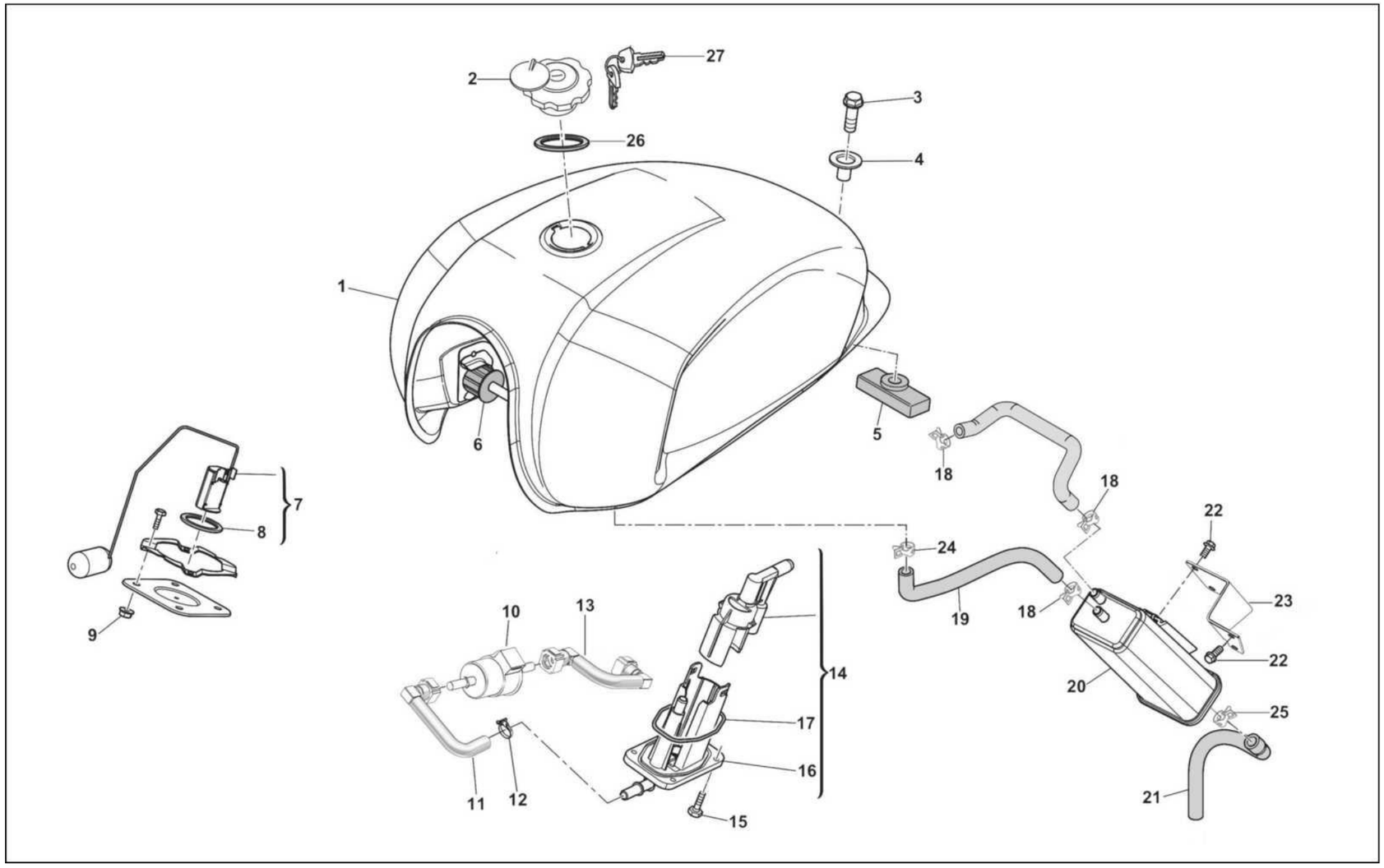
27
2
26
3
4
1
6
5
18
18
7
8
9
24
22
10
13
19
18
23
14
22
20
17
25
16
11
12
15
21

F-04 }'E^ FUEL TANK

No	Code No	NAME	Q.ty	
26	F000P01566	Gasket for fuel tank cap	1	
27	48120017	Key blank	2	

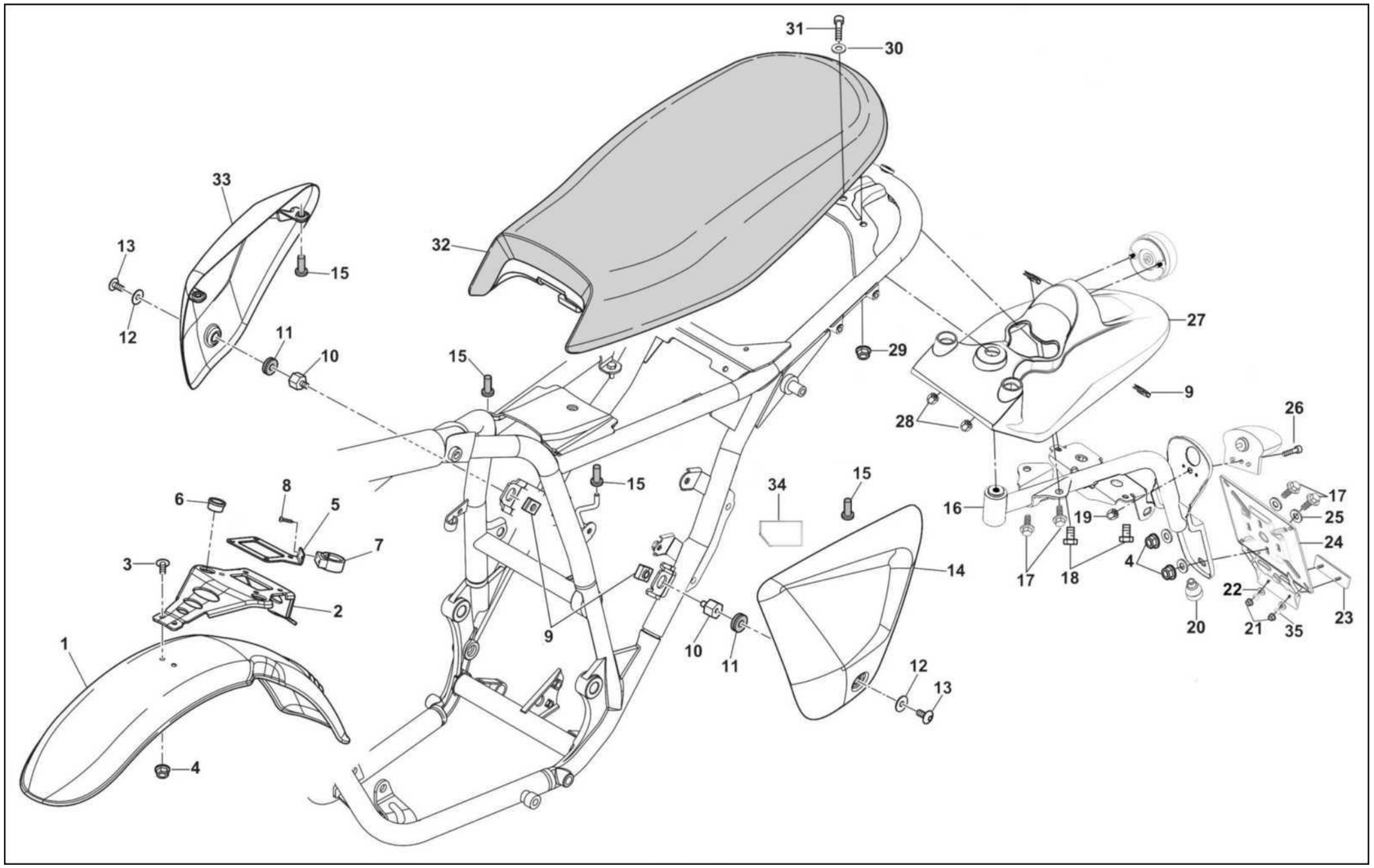
31
30
33
32
13
15
12
11
10
15
29
27
9
28
26
6
8
5
15
34
15
16
17
25
7
19
24
3
14
17
18
4
22
2
20
21
35
23
1
9
10
11
12
13
4

F-05 LEFT\RIGHTSIDE COVER&MUDGUARD

No	Code No	NAME	Q.ty	
1	F000P02287	Front fender	1	
2	F000P02408	Bracket-front fender	1	
3	Z0C055703	Bolt M6*14	4	
4	10000340	Nut M6	6	
5	F000P02717	ABS catheter bracket	1	
6	F000P02741	Front fender bracket bushing	2	
7	8000A0864	Brake oil pipe snap ring	1	
8	10000381	Self tapping screw-D3.5-L13	2	
9	U00046893	Clip Nut M6	4	
10	F000P02610	Bush-side cover	2	
11	73012613	H-glue for side cover installation	2	
12	10000376	Flanged bush <p7*99*H8	2	
13	Z0C055703	Bolt M6*14	2	
14	F000P02302	Left side cover	1	
15	73012510	Side cover fixing sleeve	4	
16	73280131	Rear license bracket	1	
17	10000348	Bolt M6*16	4	
18	10000347	Bolt M6*14	2	
19	72020549	Nut M5	1	
20	F000P04417	Rear license plate bracket plug	1	
21	72020256	Nut M5	2	
22	72040078	Washer-5	2	
23	10000269	Rear reflector (KM210)	1	
24	8000H3018	License plate mounting plate	1	
25	72040555	Washer 6	4	
26	10000397	Bolt M5*12	1	

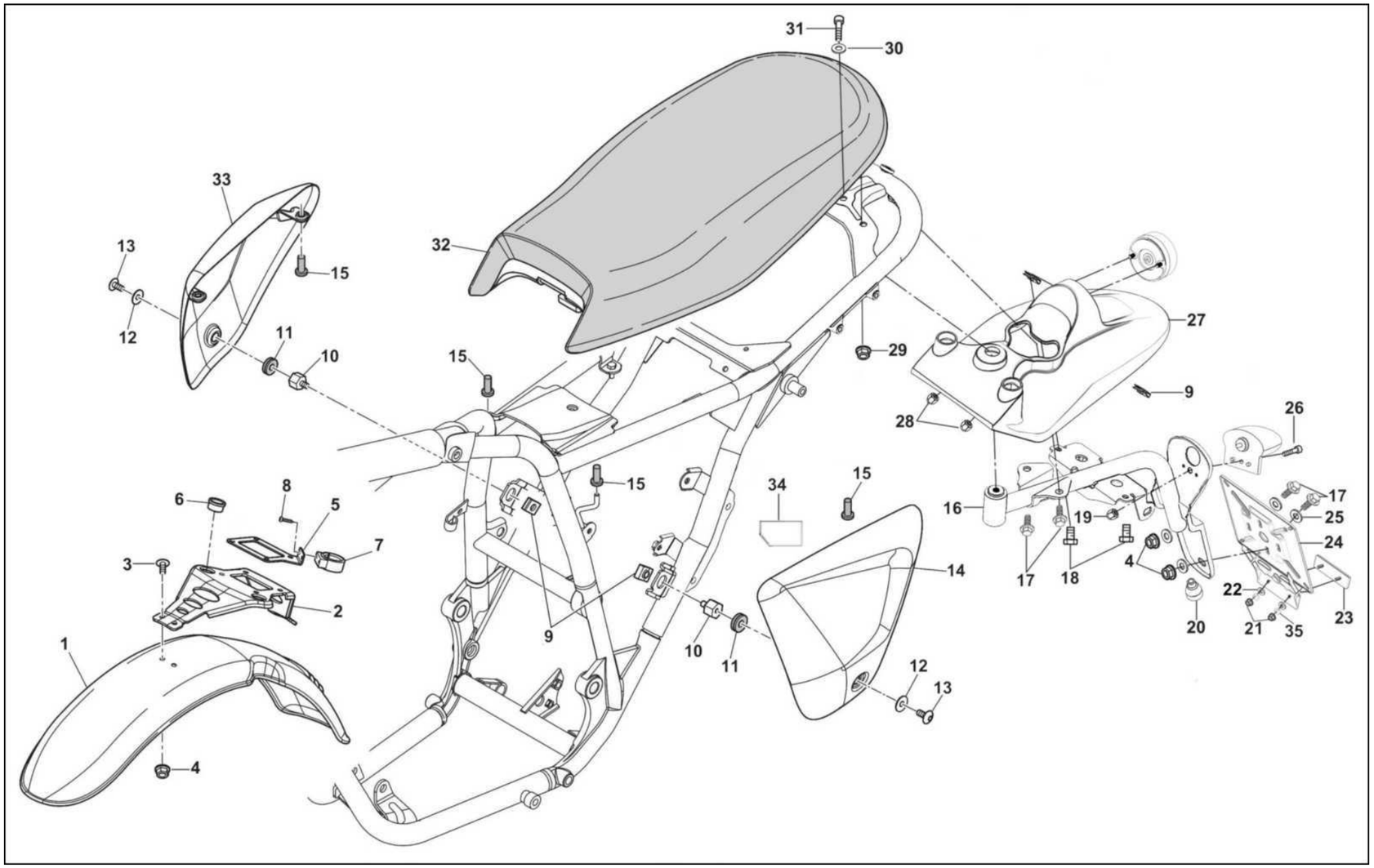
31
30
33
32
13
15
12
11
10
15
29
27
9
28
26
6
8
5
15
34
15
16
17
25
7
19
24
3
14
17
18
4
22
2
20
21
35
23
1
9
10
11
12
13
4

F-05 LEFT\RIGHT SIDECOVER&MUDGUARD

No	Code No	NAME	Q.ty	
27	53170794	Rear fender	1	
28	72020549	Nut M5	2	
29	72020040	Nut M8	2	
30	72040619	Washer 8	1	
31	10000317	Bolt M8*1.25*20	1	
32-1	F000A03191-P	Seat assy	1	
32-2	FA00A03191	Seat assy	1	
33	F000P02301	Right side cover	1	
34	73012461	Left side cover rubber pad l	1	
35	10000190	Spring washer-5mm	2	

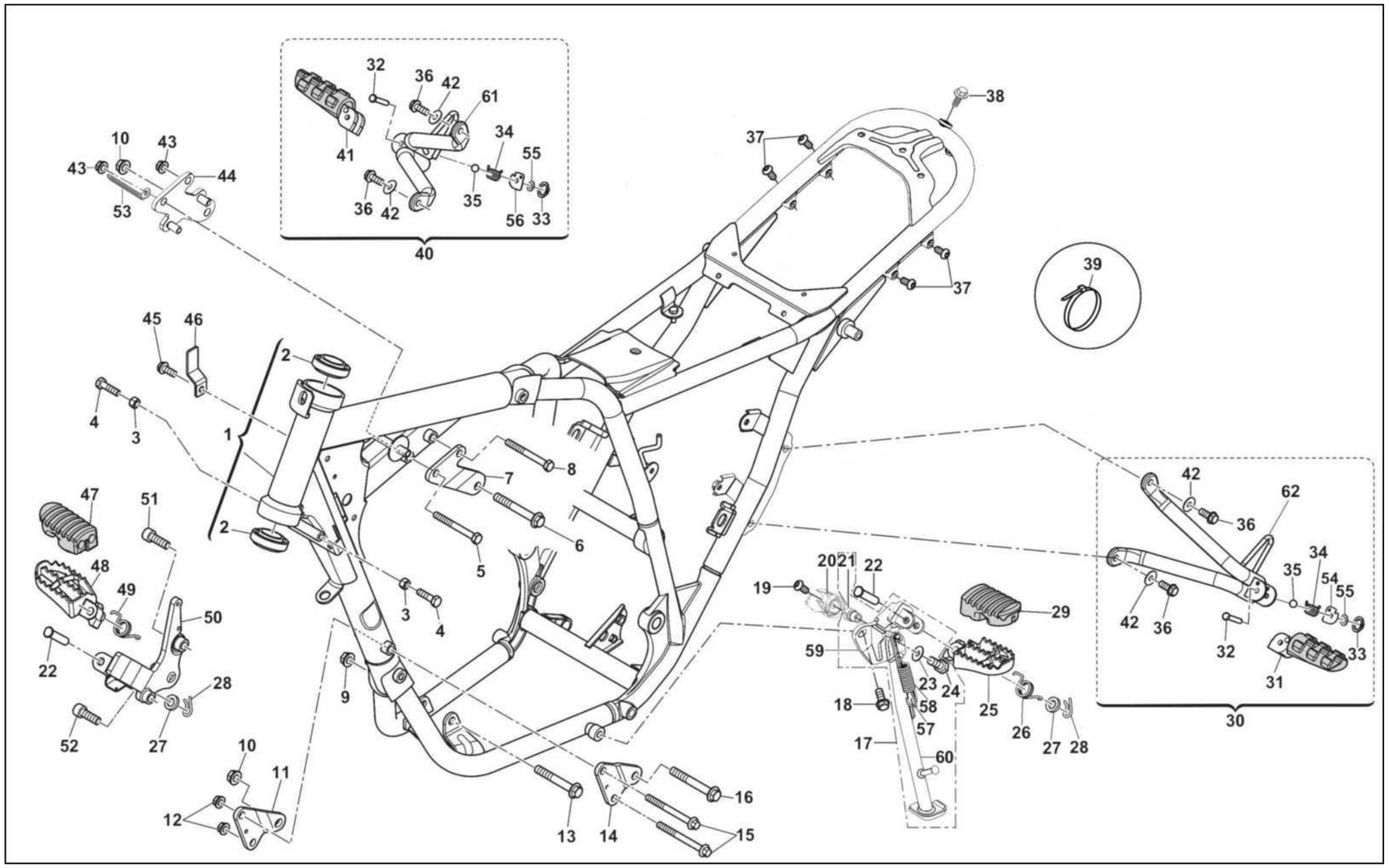
32
36
42
61
41
34
55
35
36
42
56
33
40
10
43
43
44
53
38
37
37
39
45
46
2
4
3
1
7
8
6
5
2
47
51
48
49
50
22
28
52
27
3
4
9
10
11
12
13
14
16
15
19
20
21
22
59
29
23
24
18
58
57
25
26
27
28
17
60
42
62
36
34
35
54
55
42
36
32
33
31
30

F-06 FRAME, FOOT RESTS

No	Code No	NAME	Q.ty	
1	41011836	Frame welding assy	1	
2	800087243	Tapered roller bearing	2	
3	72020571	Nut M8	2	
4	72012087	Screw M8*1.25*30	2	
5	10000434	Bolt M8*70	1	
6	72011924	Screw M10*1.25 L-70	1	
7	F0A0P00634	Upper connecting board, L. (engine)	1	
8	10000434	Bolt M8*70	1	
9	10000335	Nut M10*1.25	1	
10	10000335	Nut M10*1.25	2	
11	F0A0P00482	Front connecting board, R (engine)	1	
12	10000325	Nut M8*1.25	2	
13	72011924	Screw M10*1.25 L-70	1	
14	F0A0P00483	Front connecting board, L (engine)	1	
15	72012237	Screw M8*1.25*82	2	
16	72011925	Screw M10*1.25 L-75	1	
17	41020222	Side stand	1	
18	72011954	Screw M10*1.25*20	2	
19	FB00P03820	Screw M6*14	1	
20	31120020	Poweroff switch	1	
21	72030820	Special screw M6-M8-M14*1	1	
22	72060170	Pin	2	
23	72040619	Washer 8	1	
24	72030777	Screw M8*1.25-L16	1	

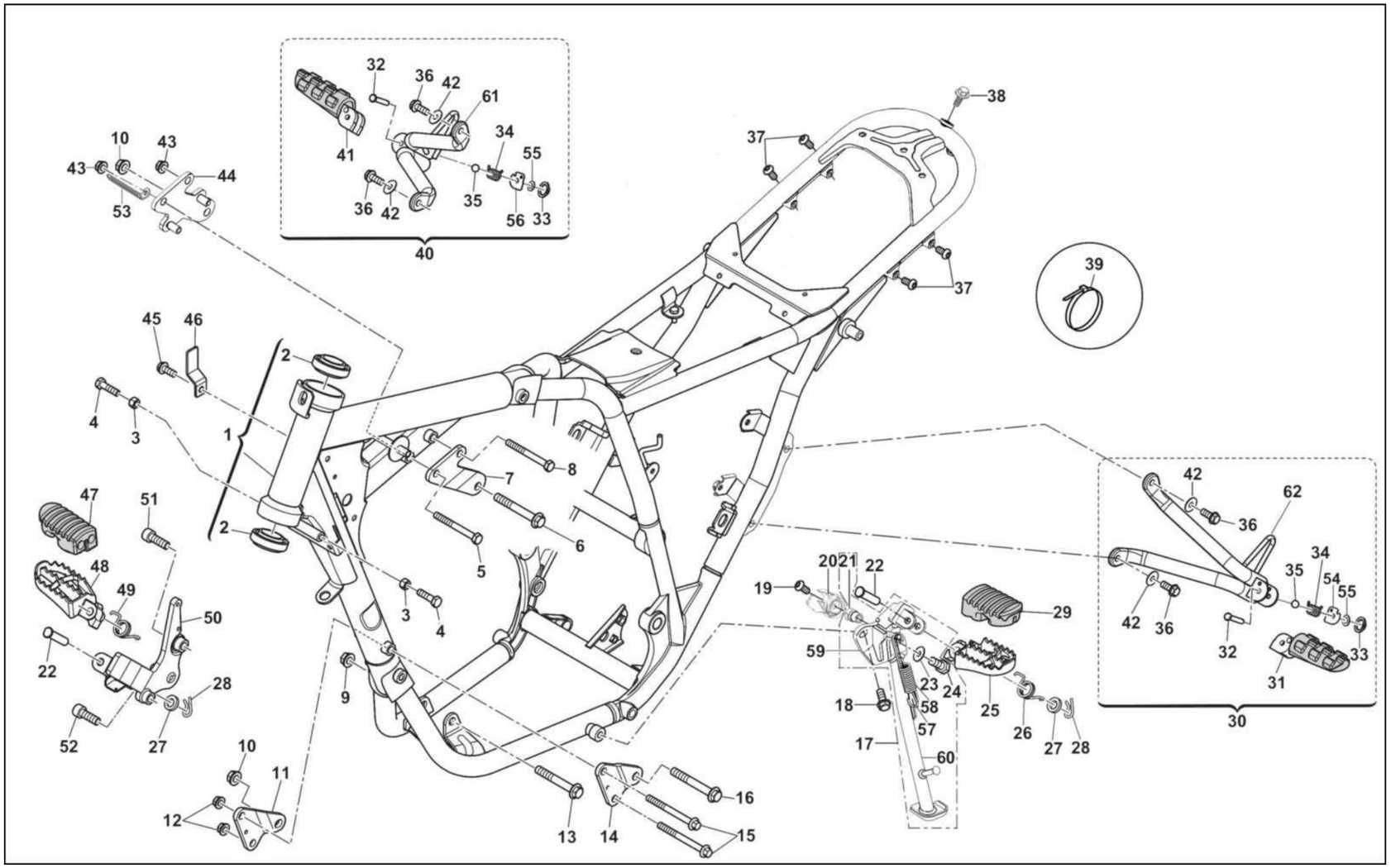
32
36
42
61
41
34
55
35
56
33
40
38
37
39
10
43
44
53
45
46
2
1
4
3
7
8
6
5
47
51
48
49
50
22
28
52
27
9
10
11
12
13
14
16
15
20
21
19
29
59
23
24
18
58
57
17
60
25
26
27
28
62
30
31

F-06 FRAME, FOOT RESTS

No	Code No	NAME	Q.ty	
25	80B089962	Footrest pedal, LH	1	
26	72050578	Front left foot spring	1	
27	10000380	Washer D16-D10,5-THK	2	
28	72060157	Split pin L18-THK2.0	2	
29	F000P00138	Front left foot rubber	1	
30	F000A02410	Left passenger foot rest assembly	1	
31	10000180	Left passenger pedal	1	
32	10000181	Rear foot rest pin	2	
33	66ND21308	Clip ring	2	
34	10000183	Spring	2	
35	10000182	Steel ball	2	
36	10000352	Bolt M8*1.25*25	4	
37	10000393	Bolt M8*1.25-16	4	
38	10000348	Bolt M6*16	1	
39	80A050005	Plastic clamp	2	
40	F000A02409	Right passenger foot rest assembly	1	
41	10000188	Right passenger pedal	1	
42	72040619	Washer 8	4	
43	10000325	Nut M8*1.25	2	
44	73070828	Right upper connecting plate-engine	1	
45	10000347	Screw M6*14	1	
46	F000P02232	Throttle cable guide ledge	1	
47	F000P00139	Front right foot rubber	1	
48	80B089953	Front Footrest assy, RH	1	
49	72050579	Front right foot spring	1	
50	F0A0A00444	Front right foot welding bracket	1	

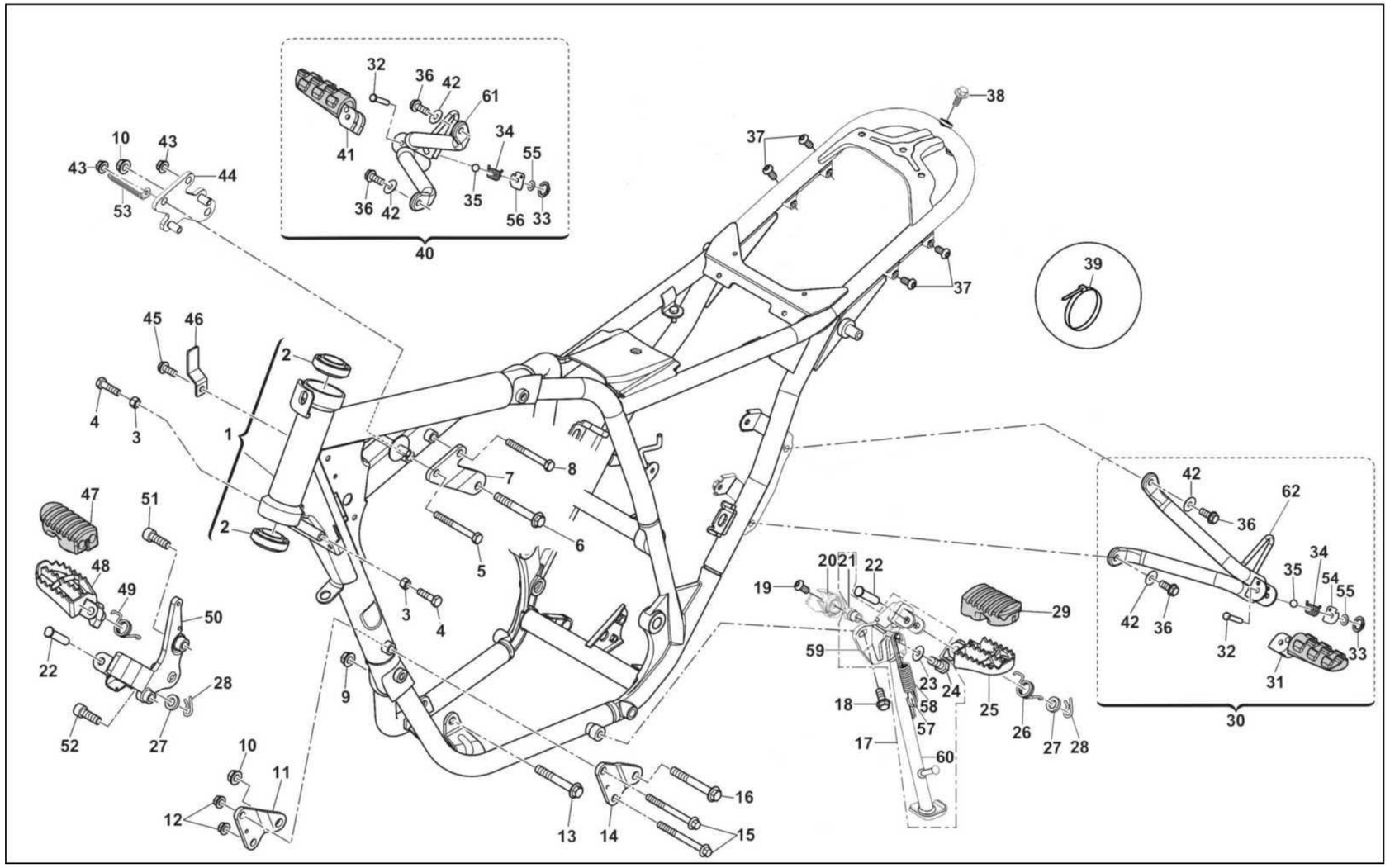
32
36
42
61
41
34
55
36
42
35
56
33
40
10
43
43
44
53
38
37
37
39
45
46
2
4
3
1
7
8
6
5
2
47
51
48
49
50
22
28
52
27
3
4
9
10
11
12
13
14
16
15
19
20
21
22
59
23
24
18
58
57
17
60
29
25
26
27
28
42
62
36
34
35
54
55
42
36
32
33
31
30

F-06 FRAME, FOOTRESTS

No	Code No	NAME	Q.ty	
51	72030730	Screw M10*1.25*30	1	
52	72011955	Screw M10*1.25*40	1	
53	10000167	Clamp	1	
54	10000184	LH passenger footrest plate	1	
55	10000185	Rear foot rest pin rubber ring	2	
56	10000189	RH passenger footrest plate	1	
57	10000176	Side bracket spring (inner spring)	1	
58	10000177	Side bracket spring (external spring)	1	
59	10000172	Front left footrest welding bracket	1	
60	10000174	Side stand	1	
61	10000186	RH passenger footrest bracket	1	
62	10000178	LH passenger footrest bracket	1	

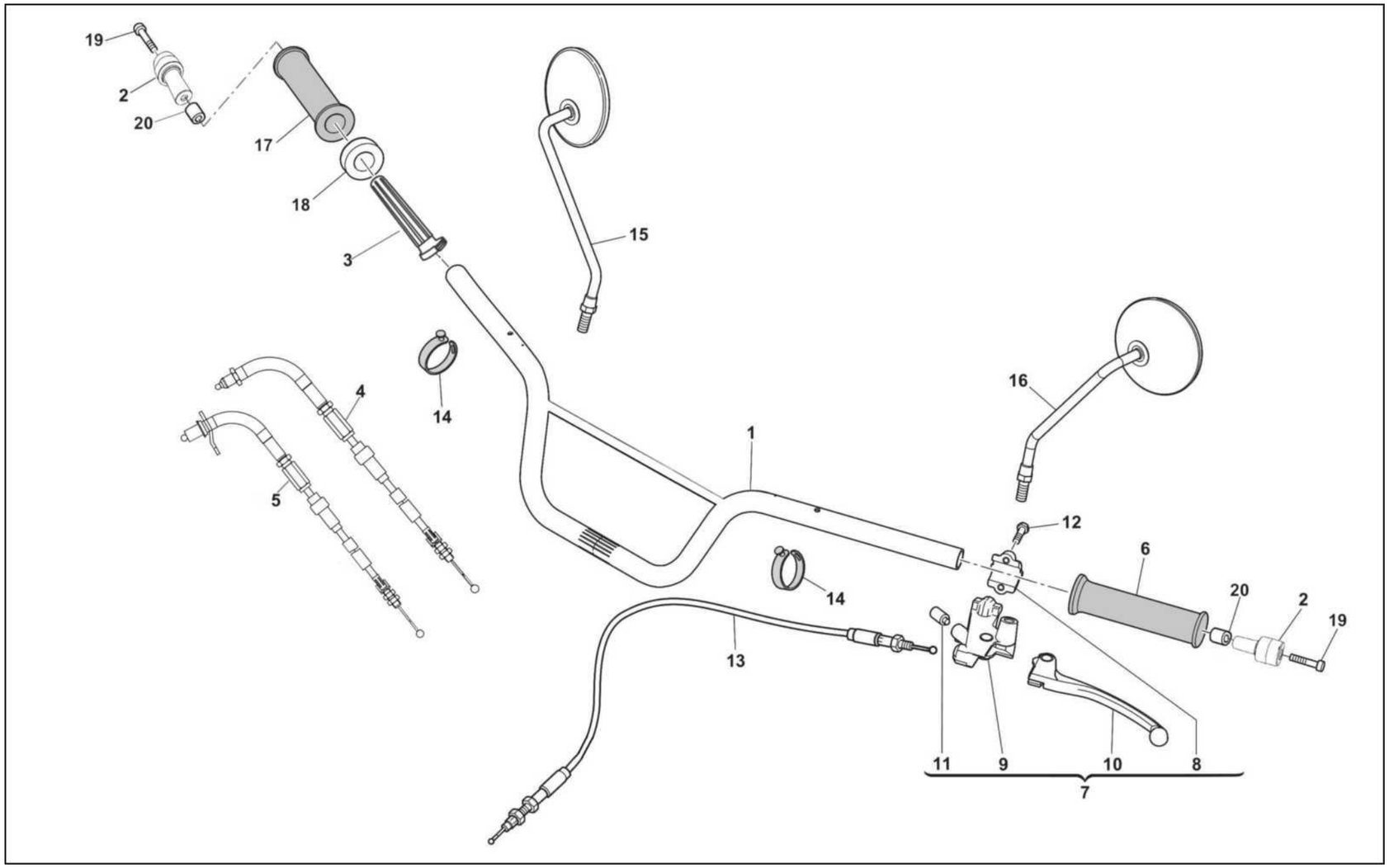
19
2
20
17
18
3
15
4
14
5
16
1
12
6
14
20
2
19
13
11
9
10
8
7

F-07 HANDLEBAR AND CONTROLS

No	Code No	NAME	Q.ty	
1	F000P01991	Handlebar	1	
2	F000P02414	Counterweight	2	
3	F000A02791	Complete throttle	1	
4	47030382	Throttle cable	1	
5	47030338	Throttle cable	1	
6	F000P02790	Rubber, left handlebar	1	
7	45190145	Clutch handle combination	1	
8	45210005	Connect clip, clutch lever	1	
9	45210004	Connect seat, clutch lever	1	
10	45190142	Clutch handle	1	
11	45530026	Clutch switch	1	
12	10000349	Bolt M6*20	2	
13	F000P02145	Clutch cable	1	
14	10000394	Rubber strap	2	
15	F000P02286	Right rearview mirror	1	
16	FA00P02286	Left rearview mirror	1	
17	F000P02789	Rubber,right handlebar	1	
18	F000P03399	Plastic washer	1	
19	10000430	Bolt M6*75	2	
20	800090890	Nut	2	

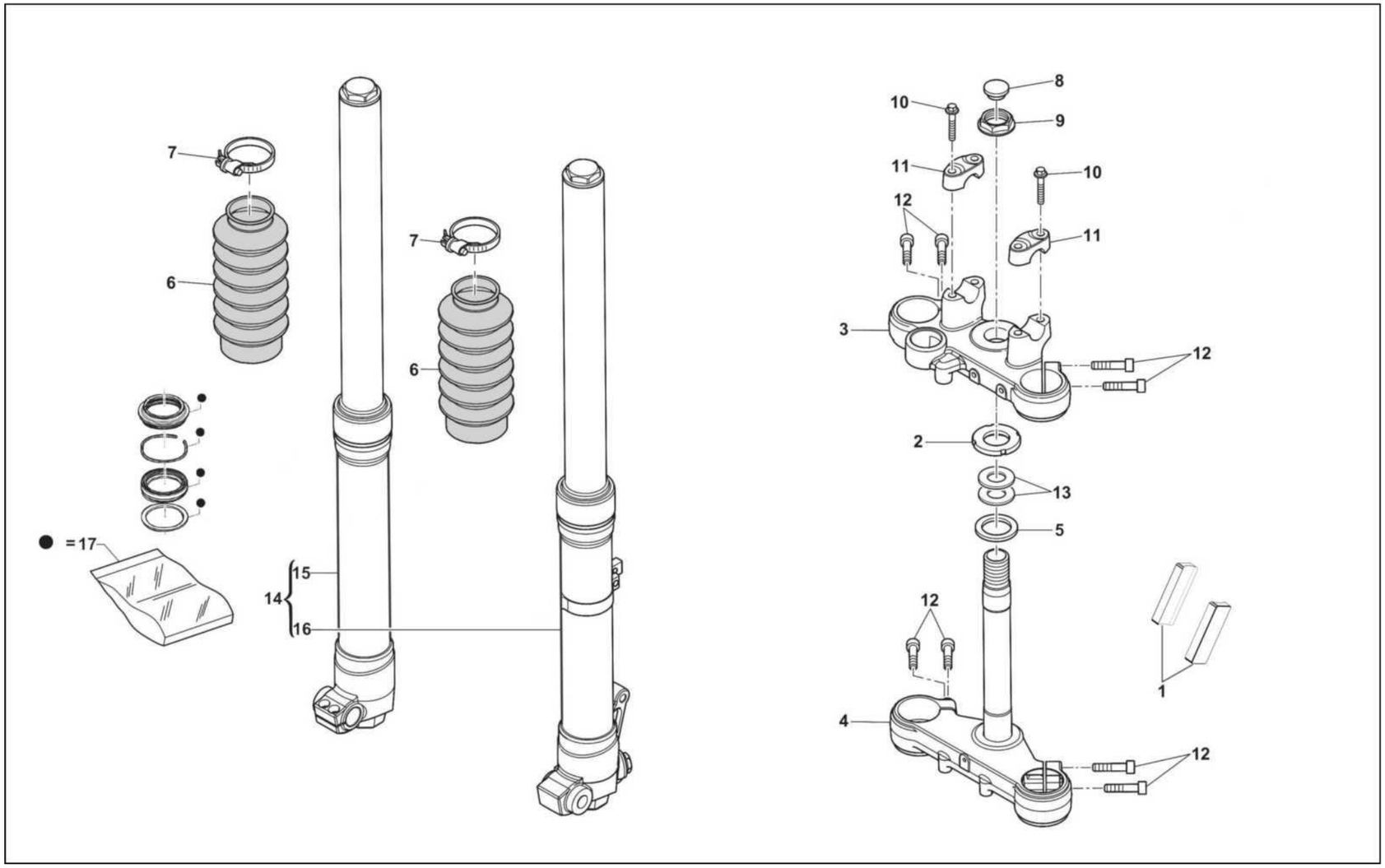
7
6
7
6
● =17
15
14
16
8
10
9
11
10
12
11
3
12
2
13
5
12
1
4
12

F-08 FRONT FORK ASSEMBLY

No	Code No	NAME	Q.ty	
1	10000270	Side reflector (KM202)	2	
2	8A0087717	Ring nut	1	
3	F0A0P00496	Upper connecting bracket	1	
4	FA00A00652	Steering column combination	1	
5	800087736	Washer	1	
6	41320059	Front shock absorber bellows	2	
7	F000P01063	Anchor ear	2	
8	F000P00912	Plug	1	
9	8A0069315	Nut	1	
10	10000431	Screw M8*1.25*33	4	
11	F0A0P00548	Connecting clamp, handlebar tube	2	
12	10000433	Screw M8*1.25*35	8	
13	800087745	Washer	2	
14	F000A02327	Front shock absorber	1	
15	F000A02328	Right front shock absorber	1	
16	F000A02329	Left front shock absorb er	1	
17	F000P01867	Gasket kit	2	

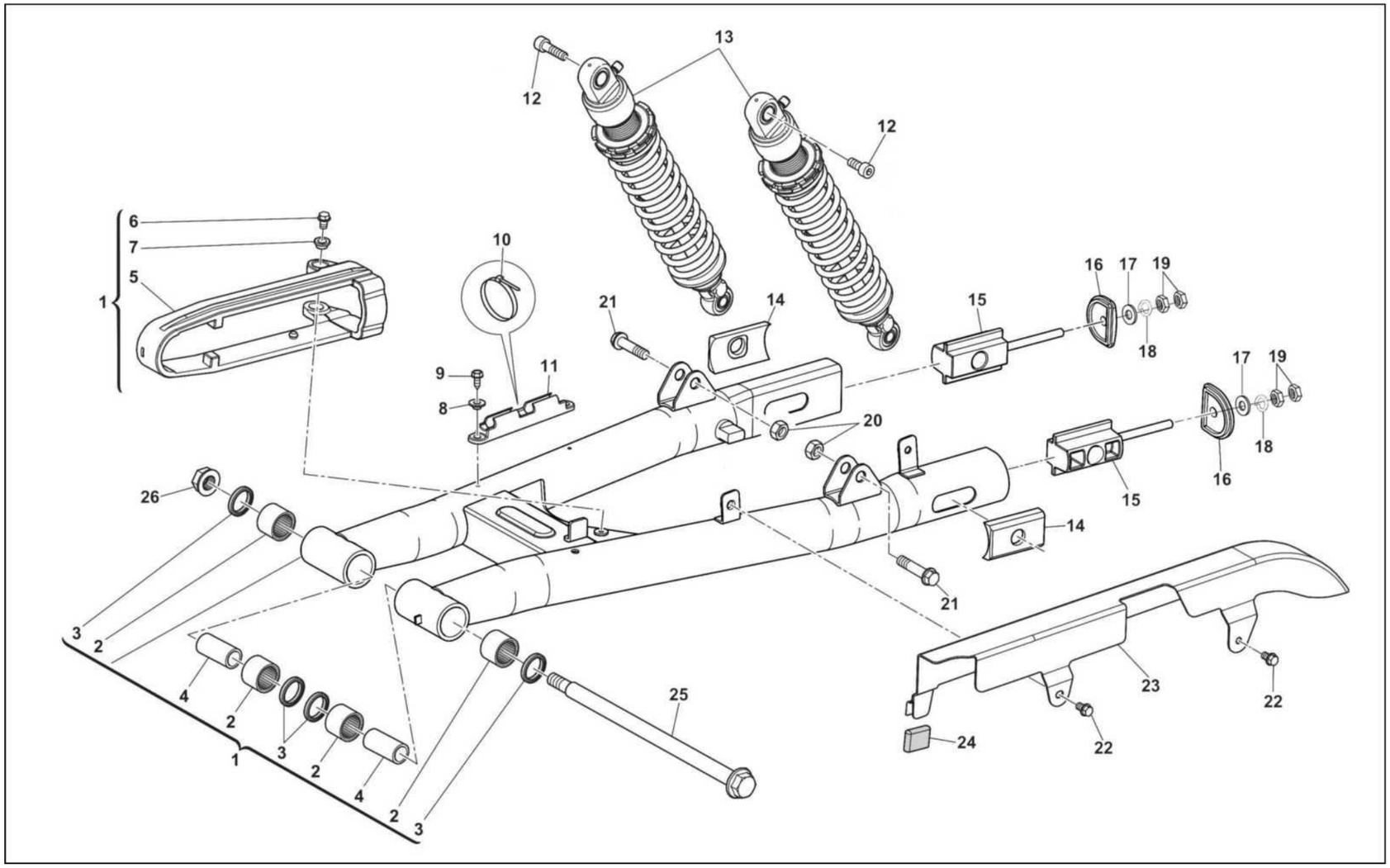
13
12
12
6
7
5
1
10
21
14
15
16
17
19
18
9
8
11
20
17
19
18
16
15
14
26
21
3
2
4
2
3
2
4
2
3
1
25
23
22
24
22

F-09 REAR SWING ARM AND SUSPENSION

No	Code No	NAME	Q.ty	
1	F000A02468	Swing arm assy	1	
2	41280414	Needle bearing	4	
3	72110236	Flat fork oil seal	4	
4	70280011	Flat fork inner bushing	2	
5	F000P02380	Protect clip-chain	1	
6	72012225	Bolt M6*12	2	
7	70120280	Assembling bush-protect clip,chain bar	2	
8	800069282	Flanged Bush 14*7*5.25	2	
9	10000355	Bolt M5*12	2	
10	80A050005	Plastic clamp	2	
11	8000B1166	Hose ring	1	
12	72030826	Screw M8*1.25*30	2	
13	F000P02231	Rear shock absorber	2	
14	F000P02217	Chain adjuster outer stop	2	
15	F000P02216	Chain bar adjuster	2	
16	F000P02218	Flat fork end tube	2	
17	62ND15506	Washer- D8.4- D15-THK1.5	2	
18	62ND15538	Spring washer	2	
19	72020015	Nut M8	4	
20	10000335	Nut M10*1.25	2	
21	10000345	Bolt M10*1.25*40	2	
22	10000346	Bolt M6*10	2	
23	F0A0P00475	Chain box	1	
24	73012153	Cushion-chain box	1	
25	70030169	Axle, rear fork	1	
26	72020488	Nut M14*1.5	1	

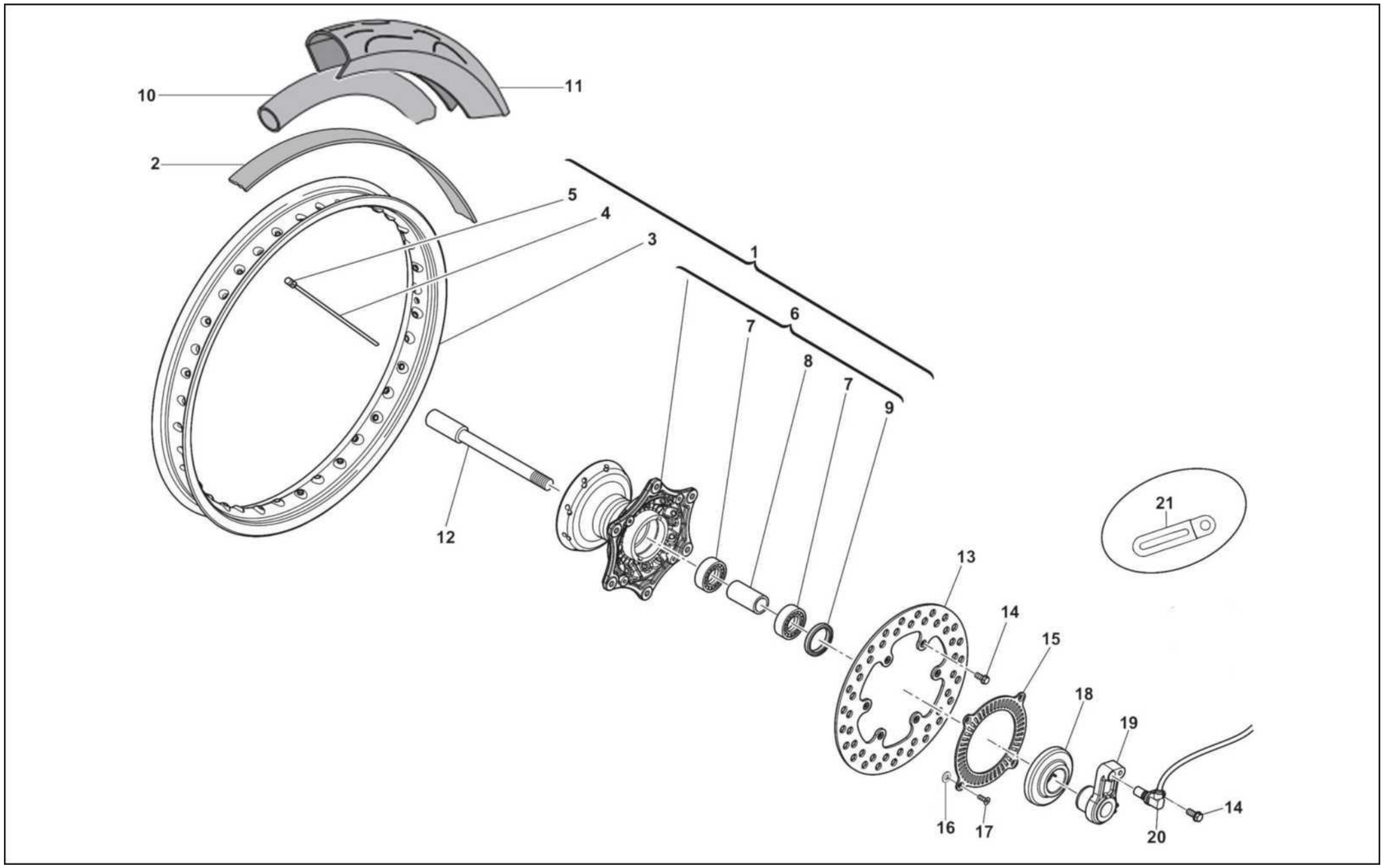
10
11
2
5
4
3
1
6
7
8
7
9
12
21
13
14
15
18
19
16
17
20
14

F-10 FRONT WHEEL

No	Code No	NAME	Q'y	
1	F000A01828	Front wheel rim assy	1	
2	54090027	Air tube protection	1	
3	F0A0P00522	Front wheel rim	1	
4	F000P00523	Spoke	36	
5	F000P00524	Nipple	36	
6	F000A01821	Front wheel hub	1	
7	70090217	Bearing 6303 2RS-CJB	2	
8	70210024	Internal spacer	1	
9	72110227	Seal-21*47*5	1	
10	54070065	Front tube	1	
11	F000P01511	Front tyre	1	
12	F000P02487	Axle, front wheel	1	
13	F000P00438	Front brake disk	1	
14	10000347	Bolt M6*14	7	
15	F000P01032	Front wheel ring gear	1	
16	F000P01792	Ring gear gasket	4	
17	10000436	Screw M4*12	4	
18	F000P01110	Sensor trim cover	1	
19	F000P01031	Before sensor bracket	1	
20	EA00P01022	Wheel speed sensor	1	
21	10000167	Clamp	1	

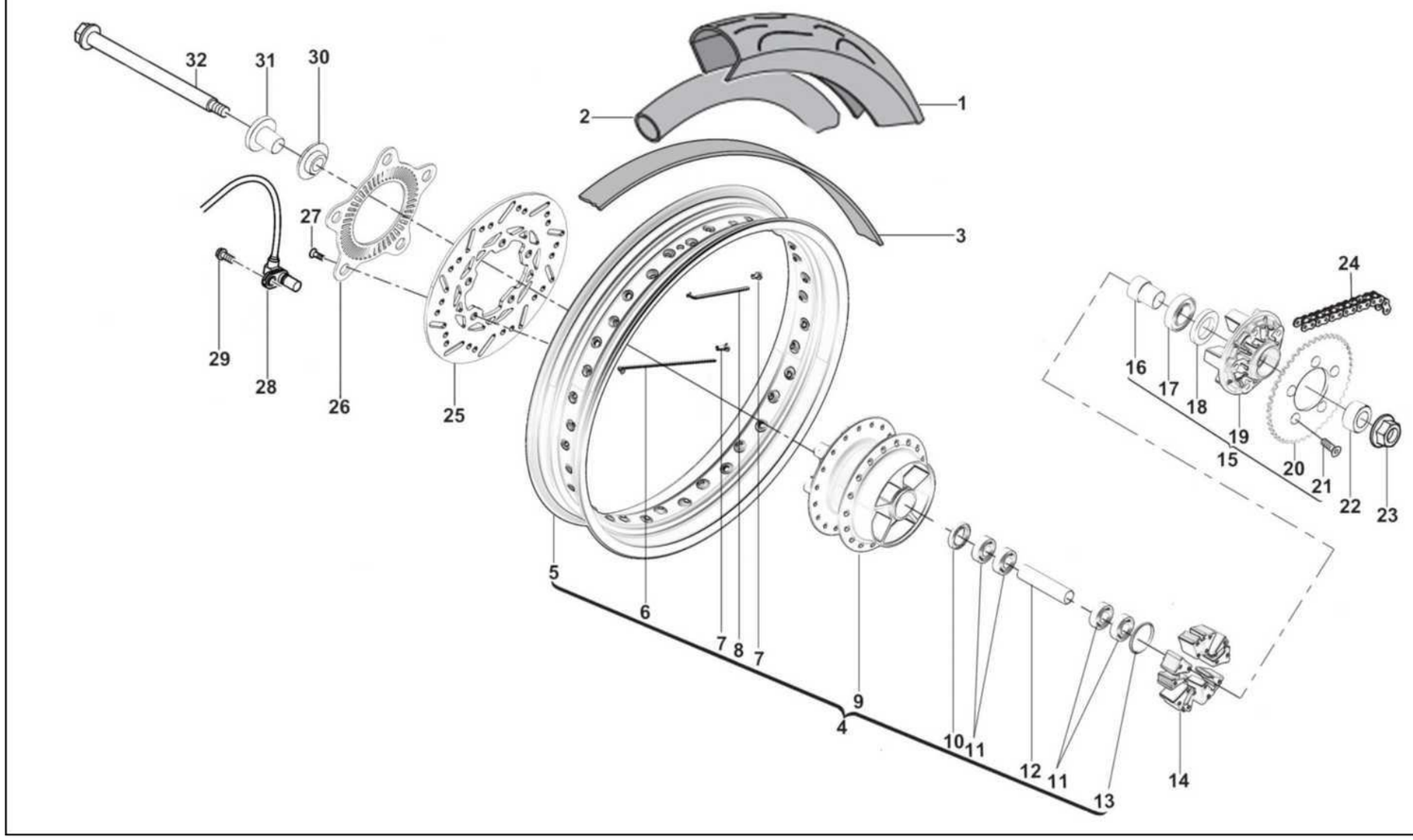
32
31
30
2
1
3
27
29
28
26
25
24
16
17
18
19
15
20
21
22
23
5
6
7
8
7
9
4
10
11
12
11
13
14

F-11 REAR WHEEL

No	Code No	NAME	Q.ty	
1	F000P01515	Rear tyre	1	
2	54080100	Rear tube	1	
3	54090026	Air tube protection	1	
4	54030411	Rear wheel rim assy	1	
5	10000200	Rear wheel rim	1	
6	10000202	Spoke	18	
7	F000P03870	Nipple-M4*0.75	36	
8	10000201	Spoke	18	
9	10000203	Rear wheel hub	1	
10	10000207	Rear hub oil seal	1	
11	10000205	Bearing-rear wheel hub	4	
12	10000206	Inner bush, front wheel hub	1	
13	10000204	O shaped washer-2.65*40	1	
14	73320010	Cushion block, rear wheel	5	
15	54270162	Buffer body assy	1	
16	10000213	Cushion inner bush	1	
17	10000212	Cushion bearing	1	
18	10000211	Cushion oil seal-33*47*7	1	
19	10000208	Cushion block	1	
20	10000209	Rear chain wheel	1	
21	10000210	Chainwheel fixing screw m10*1.5*30-10.9	5	
22	70070315	Rear wheel bush, L	1	
23	72020489	Nut M16*1.5	1	
24	54120191	Chain	1	

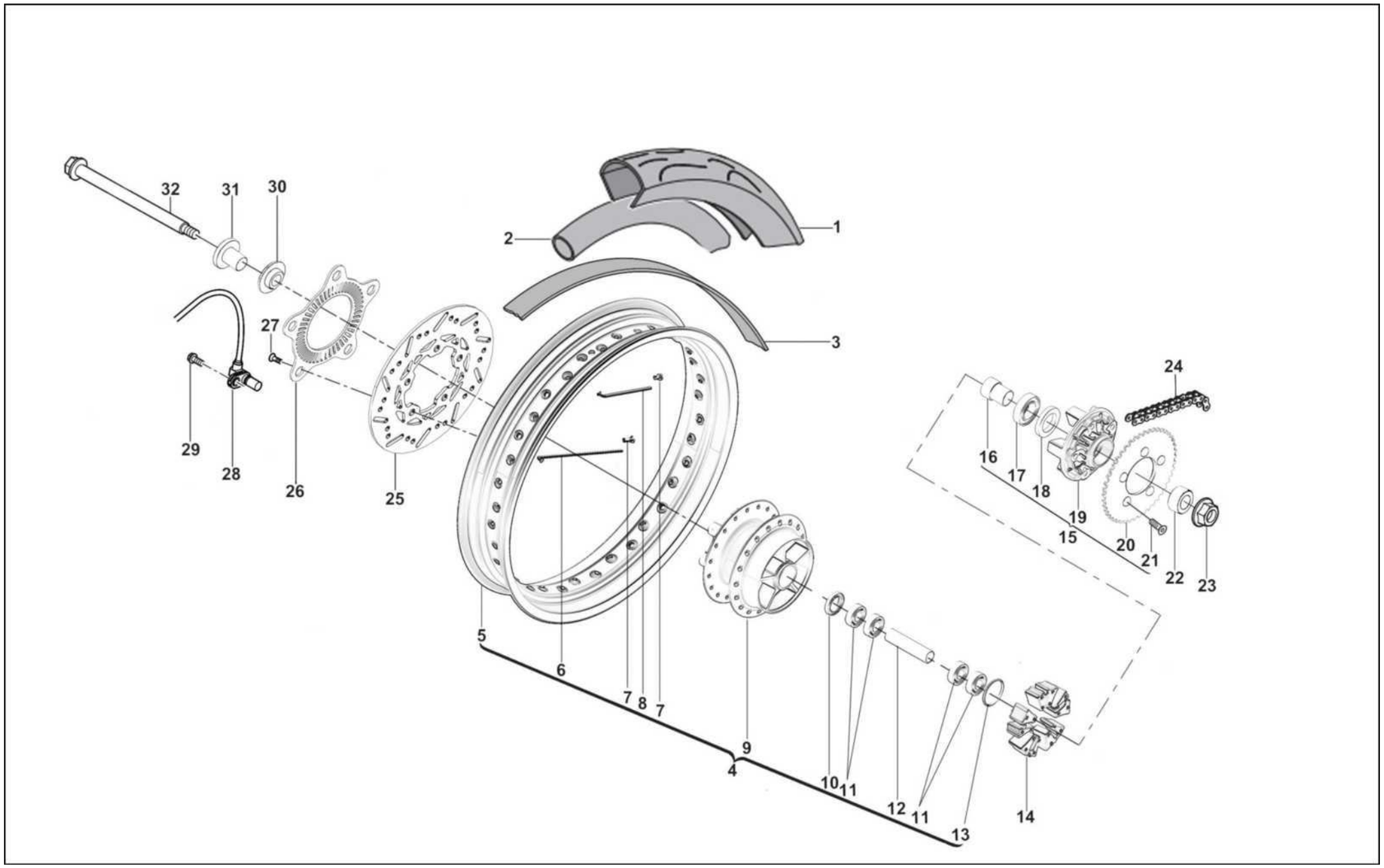
32
31
30
2
1
3
27
29
28
26
25
24
16
17
18
19
15
20
21
22
23
5
6
7
8
7
9
4
10
11
12
11
13
14

F-11 REAR WHEEL

No	Code No	NAME	Q.'y	
25	55060076	Rear disc brake plate	1	
26	55210022	After ABS ring gear	1	
27	72012448	Bolt M8*30	5	
28	E000P01022	Speed sensor (rear)	1	
29	10000347	Bolt M6*14	1	
30	70070316	Rear wheel bush, R	1	
31	70120426	bushing	1	
32	F000P02333	Axle, rear wheel	1	

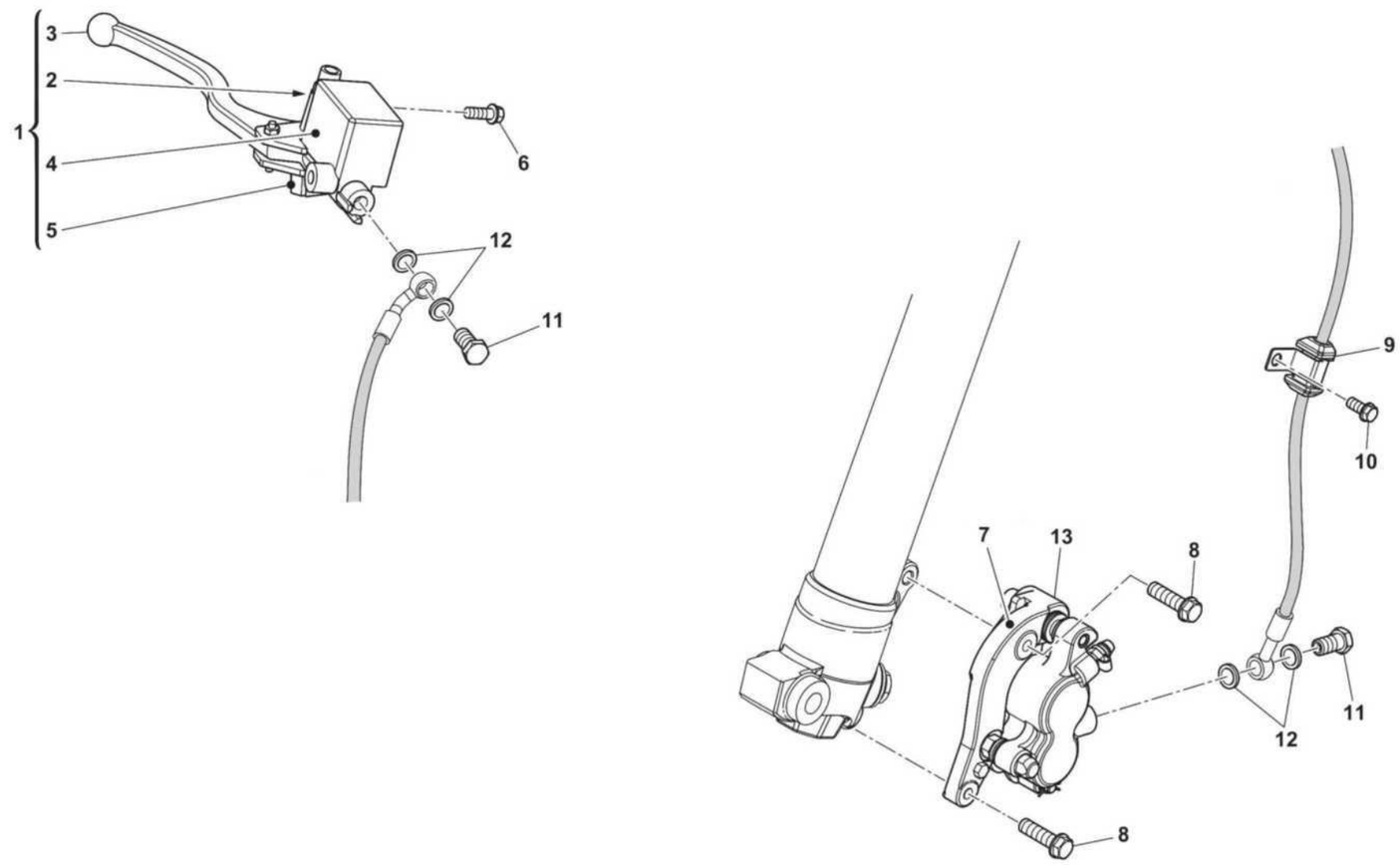
1
2
3
4
5
6
7
8
9
10
11
12
13

F-12 FRONT HYDRAULIC BRAKE

No	Code No	NAME	Q.ty	
1	10000164	Front brake main pump assembly	1	
2	55120316	Fixed block of front brake pump seat	1	
3	45180128	Front brake handle	1	
4	10000165	Front brake main pump	1	
5	55120360	Front disc brake switch	1	
6	10000350	Screw M6*25	2	
7	F000P01972	Front brake pad	1	
8	10000431	Screw M8*1.25*33	2	
9	73032259	Front brake oil pipe fixing clip	1	
10	10000349	Bolt M6*20	1	
11	72012149	Brake pipe bolt	2	
12	72040664	ABS washer	4	
13	F000A01971	Front brake caliper assembly	1	

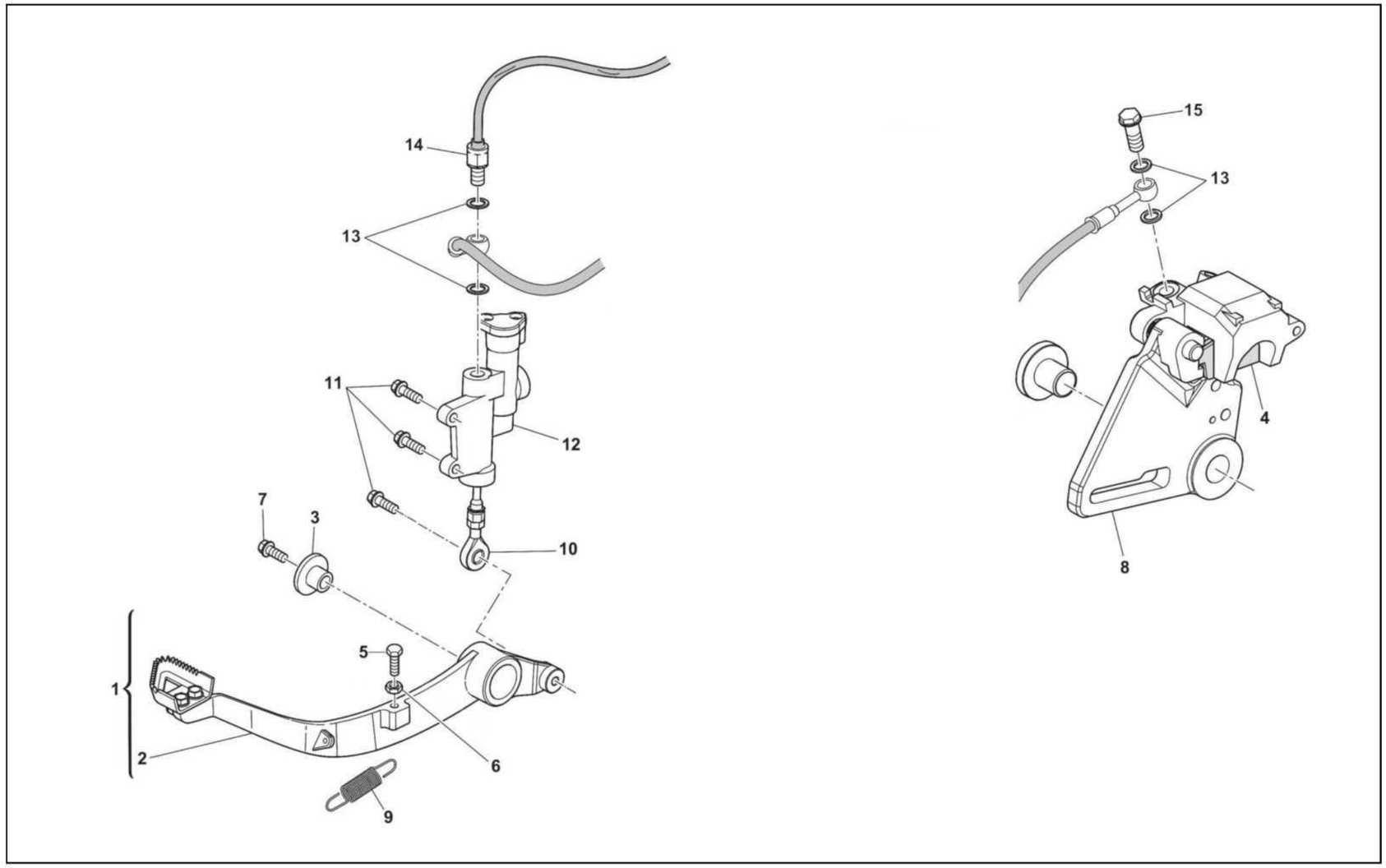
14
13
11
12
7
3
10
5
1
2
6
9
15
13
4
8

F-13 REAR HYDRAULIC BRAKE

No	Code No	NAME	Q.ty	
1	FA00A00511	Rear brake pedal	1	
2	F0A0P00512	Rear brake pedal	1	
3	70120353	Flanged bushing	1	
4	F000P01518	Rear brake pad	1	
5	72011979	Screw M5*20	1	
6	72020011	Nut M5	1	
7	10000347	Screw M6*14	1	
8	10000089	Rear brake caliper	1	
9	8000H5148	Brake pedal spring	1	
10	55120292	Push rod	1	
11	10000349	Bolt M6*20	3	
12	55120355	Rear brake pump	1	
13	72040664	ABS washer	4	
14	31240061	Rear brake switch cable	1	
15	72012148	Brake pipe bolt	1	

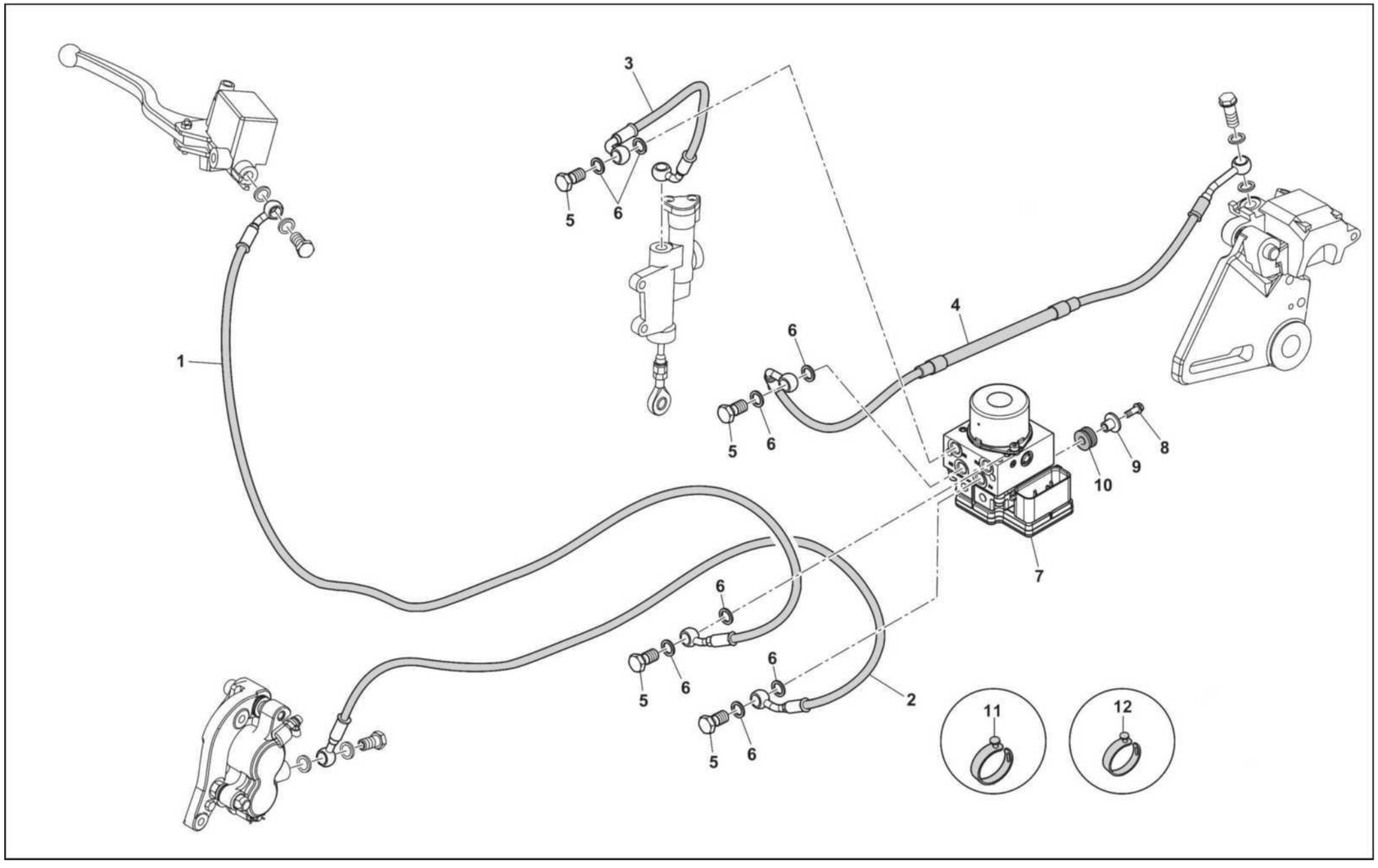
1
2
3
4
5
6
7
8
9
10
11
12

F-14 ABS ABS SYSTEM

No	Code No	NAME	Q.ty	
1	F000P01039	Front brake main pump hose	1	
2	F000P02539	Front brake caliper oil pipe	1	
3	F000P01038	Rear brake main pump oil pipe	1	
4	F000P01029	Rrear brake caliper oil pipe	1	
5	U00057155	Brake oil pipe screw (ABS)	4	
6	72040664	ABS washer	8	
7	F000P01023	ABS unit	1	
8	10000348	Bolt M6*16	2	
9	10000437	Flanged bush	2	
10	73012321	Back mud semi rubber	2	
11	10000406	Rubber clamp	1	
12	10000394	Rubber strap	4	

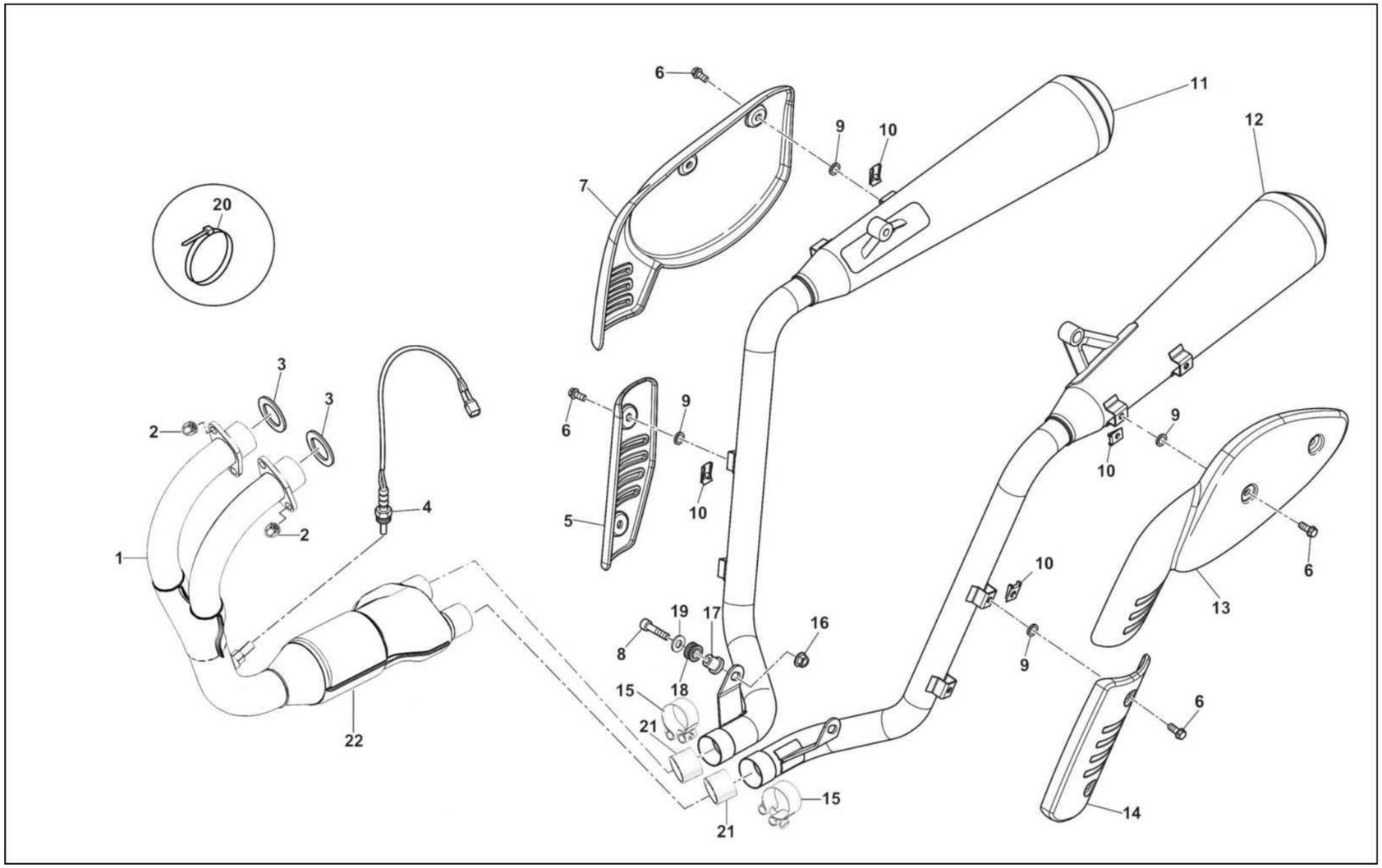
6
11
12
9
10
7
20
3
3
2
6
9
10
4
5
2
1
10
6
13
19
17
16
8
9
18
15
6
21
22
15
14
21

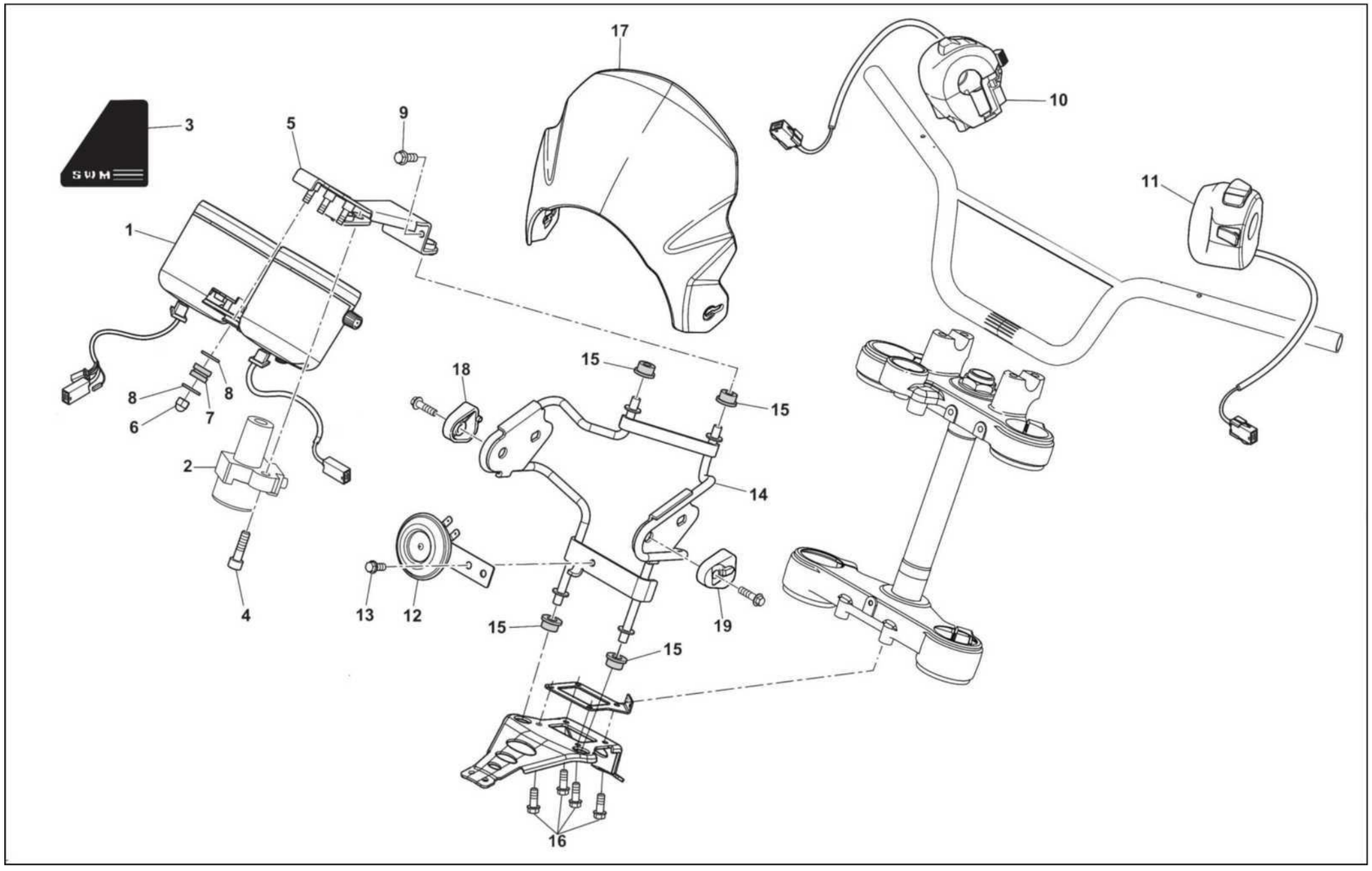
17
10
3
5
9
11
1
18
15
15
8
8
7
6
14
2
13
12
4
15
19
15
16

F-16 DIGITAL INSTRUMENT

No	Code No	NAME	Q.ty	
1	37010629	Gauge assembly	1	
2	10000191	Ignition switch lock	1	
3	F0A0P01006	Logo plate	1	
4	10000317	Screw M8*1.25*20	2	
5	F0A0P00459	Meter bracket	1	
6	72020507	Nut M6	3	
7	73012155	H-shaped gasket-side cover	3	
8	72040555	Washer6	6	
9	10000347	Bolt M6*14	2	
10	F000P01806	Handlebar switch, RH	1	
11	F000P01808	Handlebar switch, LH	1	
12	31080131	Horn	1	
13	10000346	Screw M6*10	1	
14	F0A0P00486	Head light bracket	1	
15	73012327	Cushion-headlight bracket	4	
16	10000347	Bolt M6*14	4	
17	A000P01429	Windshield screen	1	
18	A000P01427	Right windshield bracket	1	
19	A000P01428	Left windshield bracket	1	

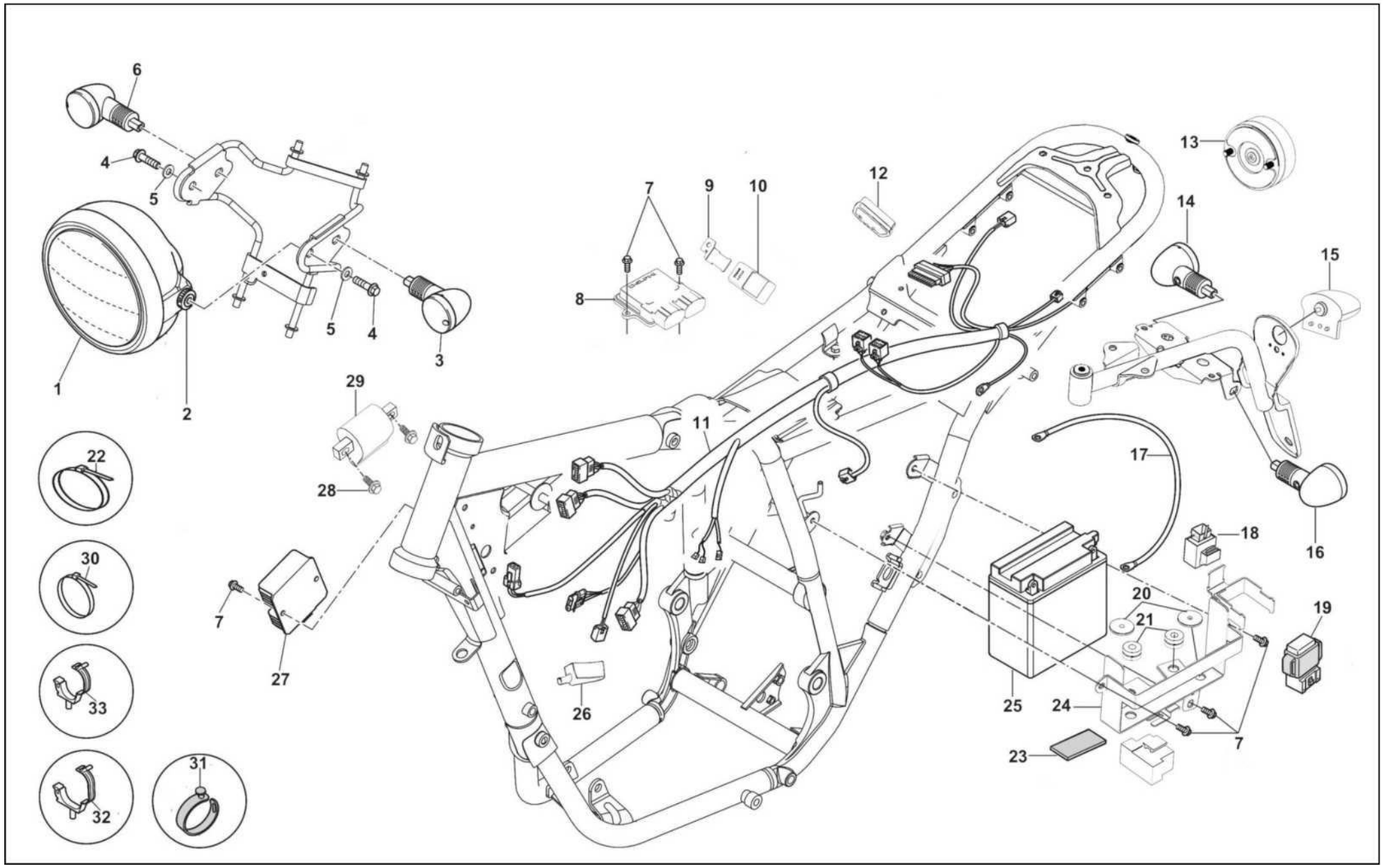
6
4
5
1
2
5
4
3
7
9
10
8
12
13
14
15
29
11
28
22
17
18
16
30
20
21
19
7
27
26
25
24
7
23
33
31
32

F-17 MAIN WIRING HARNESS

No	Code No	NAME	Q.ty	
1	E000A02313	Headlight	1	
2	F000P02714	Headlamp bushing	2	
3	E000P02315	Turninglight, front left	1	
4	10000432	Bolt M8*1.25*40	2	
5	72040619	Washer 8	2	
6	E000P02314	Tu rninglight, front right	1	
7	10000347	Screw M6*14	7	
8	31350184	ECM engine electronic control module	1	
9	73032659	Auxiliary relay bracket	1	
10	31270006	Fan control relay	1	
11	10000272	Main cable	1	
12	73012553	OBD connector dustproof set	1	
13	F000P02513	Taillight	1	
14	E000P02316	Turninglight, rear right	1	
15	32090077	Rear license plate light	1	
16	E000P02317	Turninglight, rear left	1	
17	31320027	Ground wire	1	
18	31040039	Flash relay	1	
19	E000P02437	Starting relay	1	
20	73010197	Cushion-battery	2	
21	73012629	Shock pad for battery bracket	2	

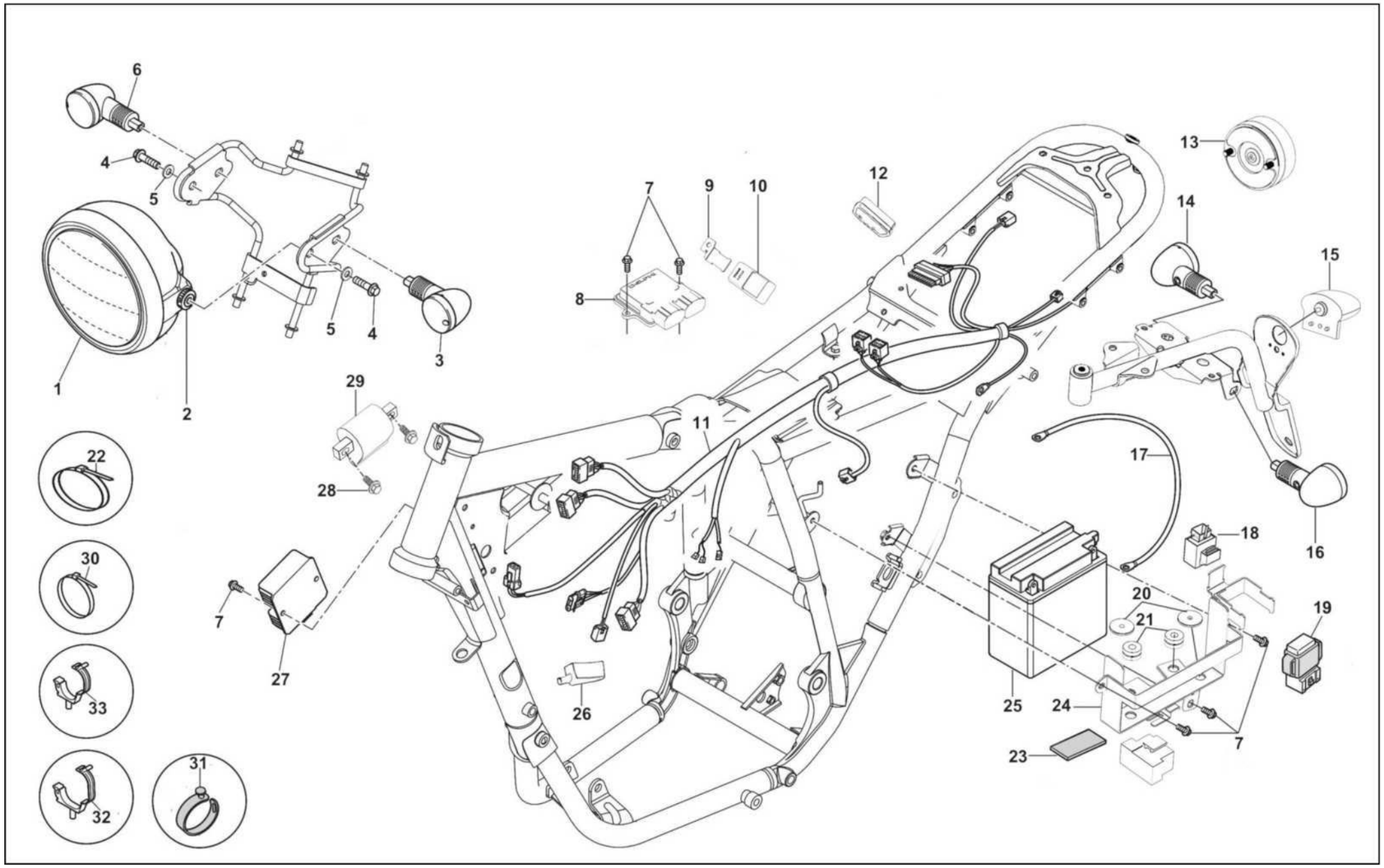
6
4
5
1
2
5
4
3
7
9
10
8
12
13
14
15
29
11
28
22
17
18
16
30
20
21
19
7
27
26
25
24
7
23
33
31
32

F-17 MAIN WIRING HARNESS

No	Code No	NAME	Q.ty	
22	80A050005	Ribbon	1	
23	F000P03850	Battery buffer single side adhesive	1	
24	73250197	Bracket, battery	1	
25	31070133	Battery	1	
26	73012555	Anti dust rubber sleeve of ABS joint	1	
27	31030096	Voltage regulator	1	
28	10000348	Bolt M6*16	2	
29	31020141	Ignition loop	1	
30	80A050005	Plastic clamp	5	
31	10000406	Rubber clamp	3	
32	F000P02851	Clamp	1	
33	8A0060283	Clamp	1	

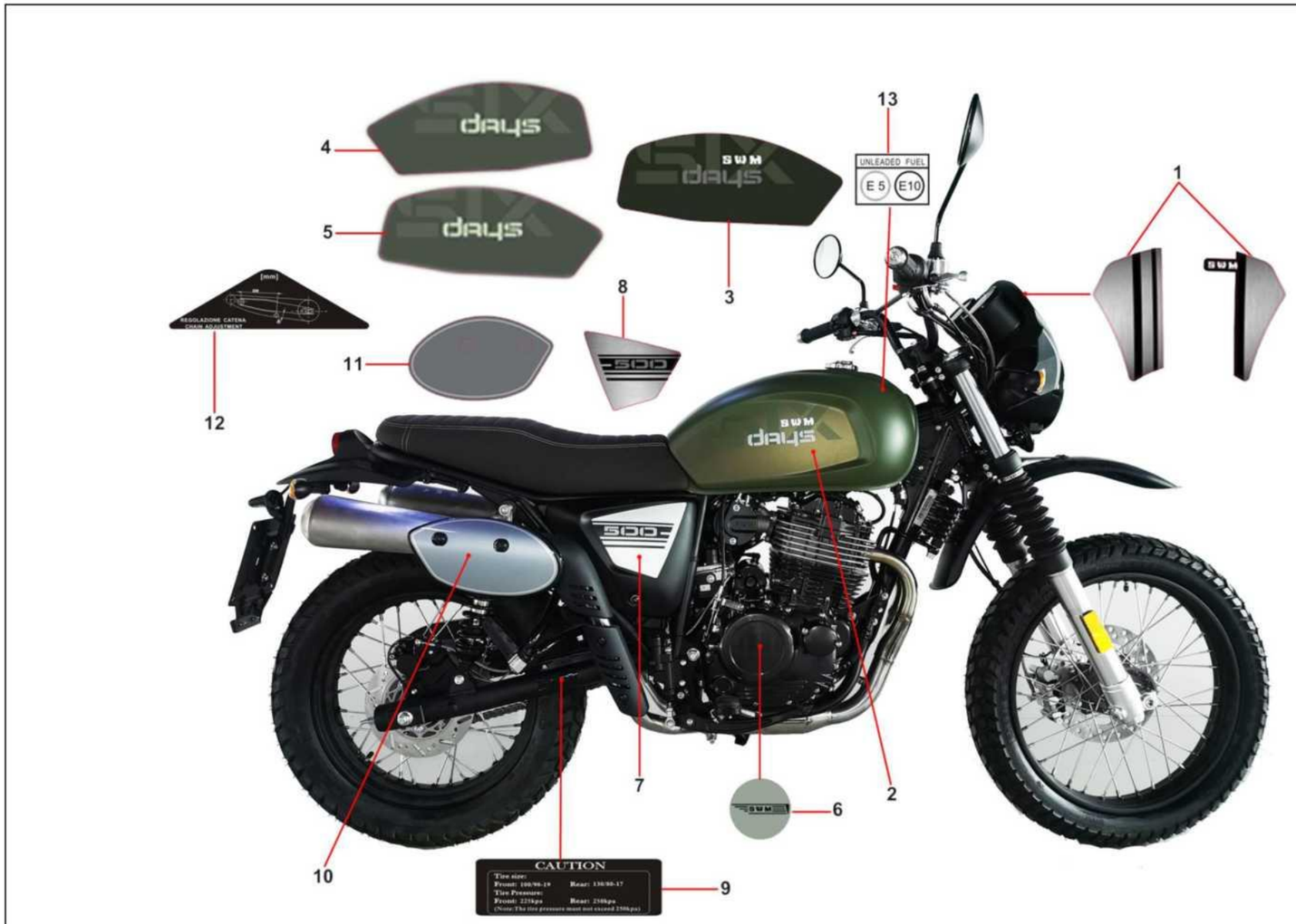
1
2
3
4
5
6
7
8
9
10
11
12
13
UNLEADED FUEL
E 5
E10
CAUTION

F-18 DECAL

No	Code No	NAME	Q.ty	
1	F000P02324	Windshield sticker	1	
2	F000P04347	RH fuel tank sticker(Olive green fuel tank)	1	
3	F000P04348	LH fuel tank sticker(Olive green fuel tank)	1	
4	F000P04814	RH fuel tank sticker (Grey fuel tank)	1	
5	F000P04815	LH fuel tank sticker (Grey fuel tank)	1	
6	M000P01373	Clutch cover sticker	1	
7	F000P04350	RH side panel sticker	1	
8	F000P04352	LH side panel sticker	1	
9	71011180	Tyres pressure label	1	
10	F000P04354	RH lateral number plate sticker	1	
11	F000P04356	LH lateral number plate sticker	1	
12	71011183	Chain sticker	1	
13	A000P03858	Decal unleaded fuel	1	

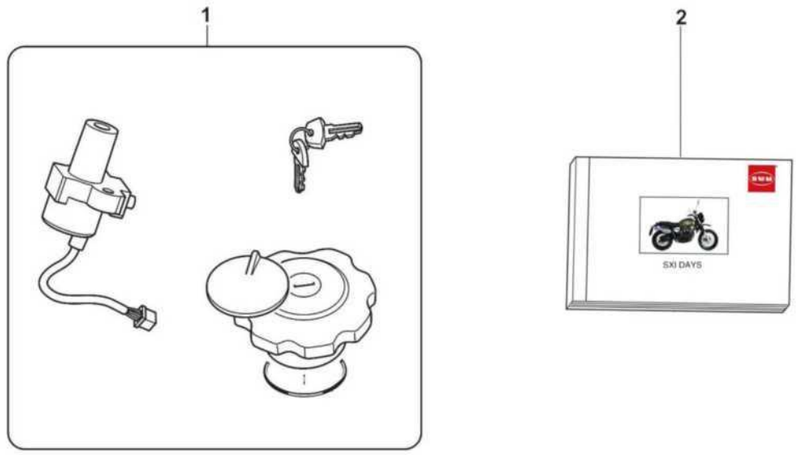
1
2
SXI DAYS

F-19 LOCK KIT

No	Code No	NAME	Q.ty	
1	76020504	Lock kit	1	
2	10000139	Quick manual	1	